Parts Manual

Mfg. No: 543477-0002-J1

Copyright © Briggs and Stratton. All Rights reserved

22-Aug-2017

Model Components

Page

Air Cleaners, Purge Lines. 4
Alternators, Electric Starter, Armatures, Regulators. 8
Blower Housings, Rotating Screens, Stub Shafts. 10
Carburetor Overhaul Kit, Engine/Valve Gasket Sets. 14
Carburetor, Fuel Pumps. 20
Control Brackets, Links, Springs. 24
Crankcase Covers, Camshaft. 26
Cylinder Heads, Rocker Covers. 28
Cylinders, Piston/Rings/Rod, Crankshaft. 32
Flywheels, Air Guides, Speed Sensor. 36
Intake Manifold, Intake Elbows, Gaskets. 38
Mufflers, Exhaust Manifold. 40
Oil Coolers, Filter, Oil Cooler Hoses. 42
Wire Harness's, Wire Assembly. 44

Not For Reproduction

Copyright © Briggs and Stratton. All Rights reserved

Mfg. No: 543477-0002-J1

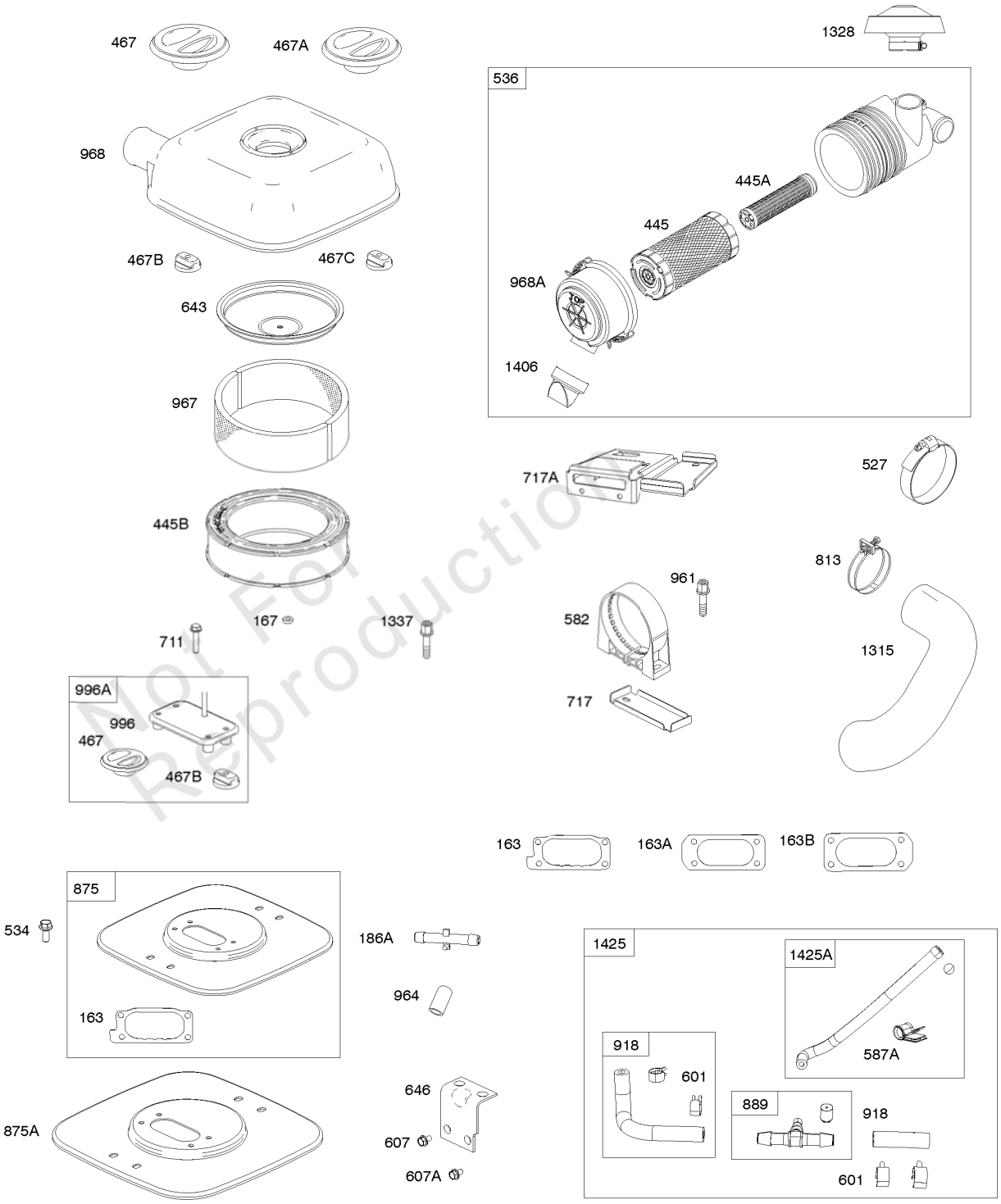

Not For Reproduction

REF NO	PART NO	QTY	DESCRIPTION
163	807375		Gasket-Air Cleaner
163A	843117		Gasket-Air Cleaner -Used After Code Date 06062200
167	841855		Seal-Air Cleaner Nut -Used Before Code Date 14012800
186A	845121		Connector-Hose -(EVAP)
445	841497		Filter-A/C Cartridge
445A	821136		Filter-A/C Cartridge
445B	692519		Filter-A/C Cartridge
467	846008		Knob-Air Cleaner Cover -(M8) -Used After Code Date 14012700
467A	841846		Knob-Air Cleaner Cover -(M6) -Used Before Code Date 14012800
467B	846432		Knob-Air Cleaner Cover -(M8) -Used After Code Date 14012700
467C	844618		Knob-Air Cleaner Cover -(M6) -Used Before Code Date 14012800
527	690423		Clamp-Tube
534	692062		Screw -(Air Cleaner) (M8x18mm)
536	809670		Cleaner-Air
582	809878		Clamp-Air Cleaner
587A	807116		Clamp-Cable -(Purge Line Hose)
601	844405		Clamp-Hose -(Breather Tube) -Used After Code Date 07121300
607	807385		Screw -(Air Cleaner Brace) (M6x35mm)
607A	841233		Screw -(Air Cleaner Brace) (M6x10mm)
643	844932		Retainer-Air Filter
646	841849		Brace-Air Cleaner
711	807385		Screw -(Carburetor Shield)
717	841886		Bracket-Air Cleaner
717A	842730		Bracket-Air Cleaner
813	807376		Clamp -(Air Cleaner Hose)
875	843118		Base-Air Cleaner -Used After Code Date 06062200
875A	841851		Base-Air Cleaner -Used Before Code Date 06062300
889	845918		Tee
918	844525		Hose-Vacuum
961	807382		Screw -(Air Cleaner Bracket)
964	590799		Cap-Connector
967	692520		Filter-Pre Cleaner
968	841847		Cover-Air Cleaner
968A	842621		Cover-Air Cleaner
996	846006		Shield-Carburetor -(M8 Stud) -Used After Code Date 14012800

Not For Reproduction

Copyright © Briggs and Stratton. All Rights reserved

Mfg. No: 543477-0002-J1

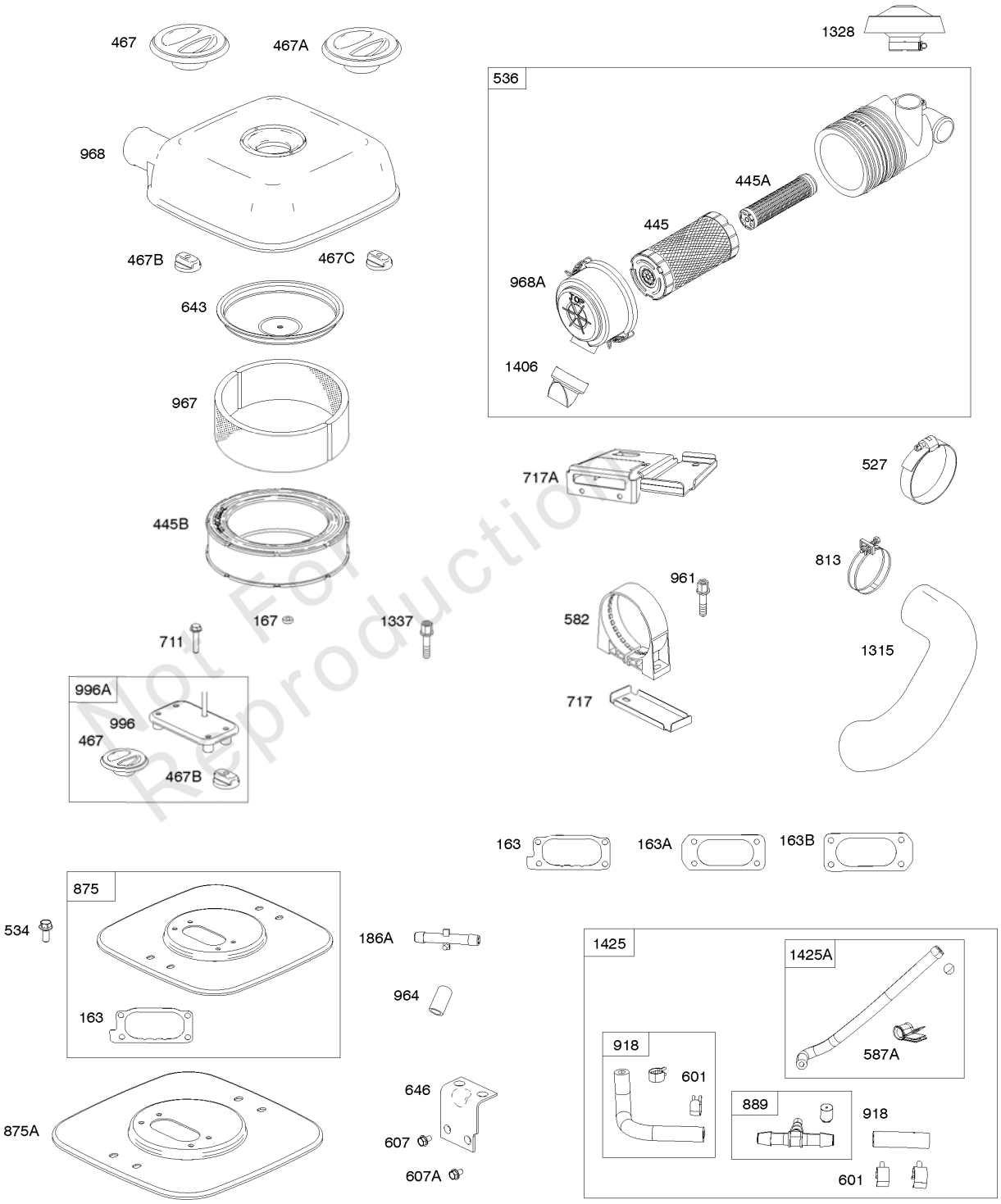

Not For Reproduction

Air Cleaners, Purge Lines

REF NO	PART NO	QTY	DESCRIPTION
996A	846013		Shield-Carburetor -(M8 Stud) -Used After Code Date 16062200 -Used Before Code Date 14012900
1315	809905		Hose-Air Cleaner
1328	809907		Cap-A/C Rain
1337	807382		Screw -(Air Cleaner Clamp)
1406	842623		Valve-Debris
1425	845919		Hose-Purge Line
1425A	844712		Hose-Purge Line

Not For Reproduction

Copyright © Briggs and Stratton. All Rights reserved

Mfg. No: 543477-0002-J1

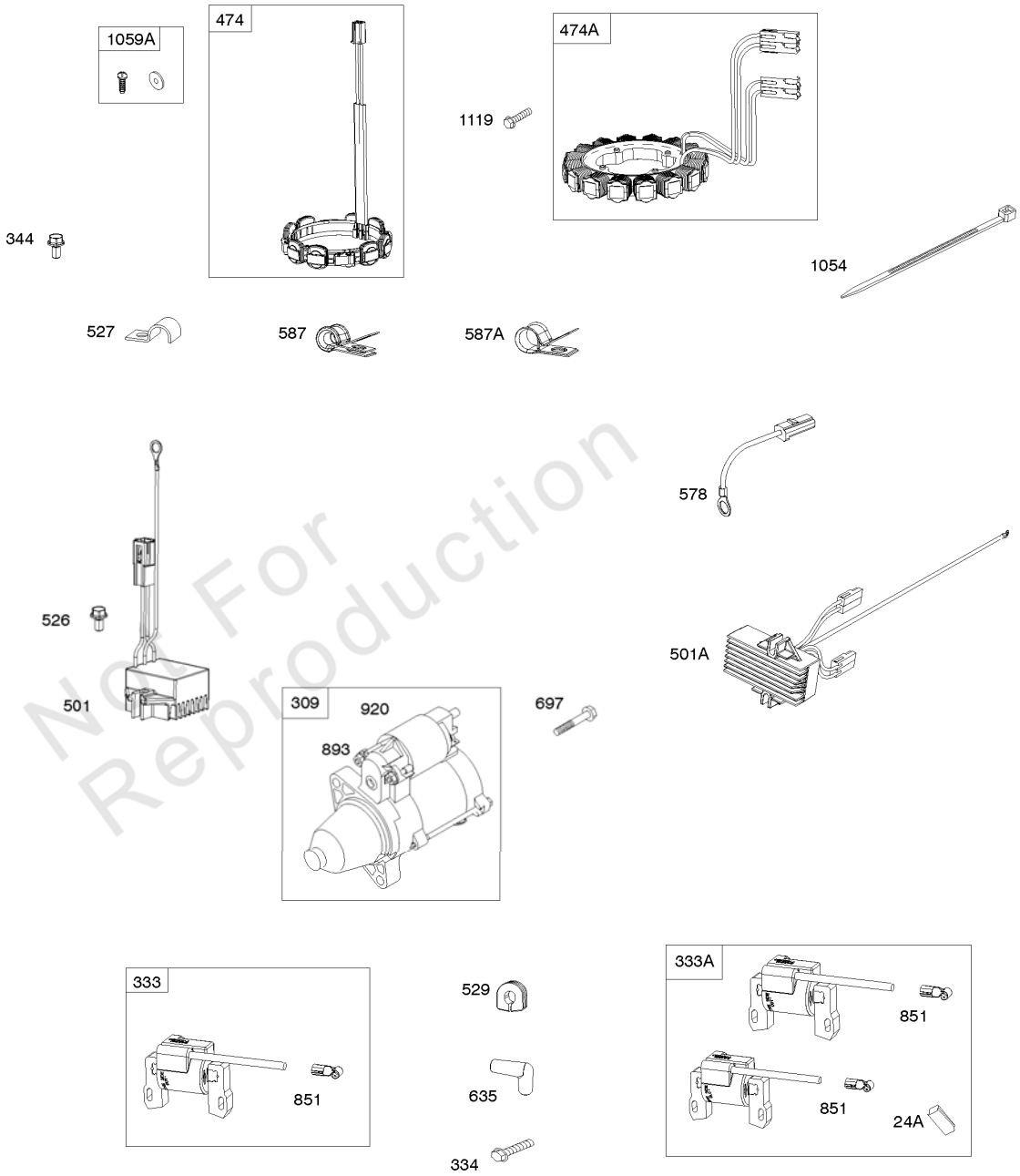

Not For Reproduction

Alternators, Electric Starter, Armatures, Regulators

REF NO	PART NO	QTY	DESCRIPTION
24A	843837		Key-Flywheel -(Offset Key) (Aluminum) -Used Before Code Date 06111400
309	845760		Motor-Starter
333	845126		Armature-Magneto -Used After Code Date 06111400
333A	843860		Armature-Magneto -(Includes Offset Flywheel Key) -Used Before Code Date 06111500
334	692066		Screw -(Magneto Armature) (M4x23mm)
344	841233		Screw -(Cable Clamp) (M6x10mm)
474	846882		Alternator -(20 Amp)
474A	841178		Alternator -(20/50 Amp)
501	847385		Regulator -(20 Amp)
501A	841170		Regulator -(20/50 Amp)
526	807385		Screw -(Regulator) (M6x35mm)
526	690717		Screw -(Regulator) (M6x30mm)
527	690423		Clamp-Tube
529	690744		Grommet -(Magneto Armature Wires)
578	846899		Wire Assembly -(Regulator to Starter Motor) (Red) -Used After Code Date 15110100
587	846866		Clamp-Cable
587A	807116		Clamp-Cable -(Purge Line Hose)
635	692076		BOOT, Spark Plug
697	690711		Screw -(Starter Motor) (Drive Cap)
851	493880S		TERMINAL, Spark Plug
893	845758		Nut -(Starter Solenoid)
920	846737		Solenoid-Starter
1054	280275		Tie-Cable
1059A	698516		KIT, Screw/Washer -(Alternator)
1119	691552		Screw -(Alternator) (M4x30mm)

Not For Reproduction

Copyright © Briggs and Stratton. All Rights reserved

Mfg. No: 543477-0002-J1

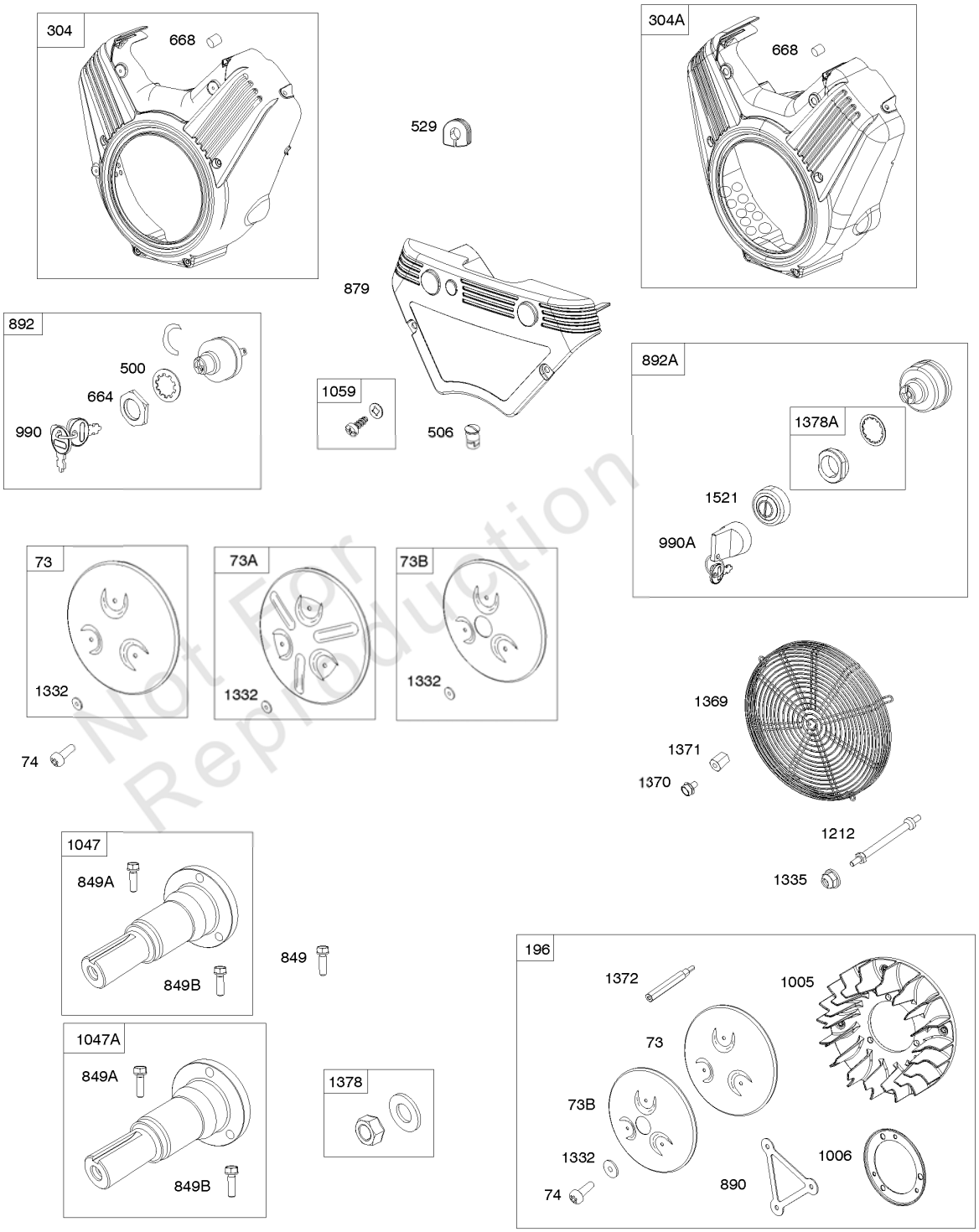

Not For Reproduction

REF NO	PART NO	QTY	DESCRIPTION
73	841840		Screen-Rotating -Used After Code Date 05010900
73A	809945		Screen-Rotating -Used Before Code Date 05011000
73B	842248		Screen-Rotating -(Stub Shaft Hole) -Used After Code Date 05010900
74	809947		Screw -(Rotating Screen)
196	847200		Fan/Screen Assembly -Used Before Code Date 05011000
304	846964		Housing-Blower -(Non Oil Cooler) -Used After Code Date 11041200
304	809959		Housing-Blower -(Non Oil Cooler) -Used Before Code Date 11041300
304A	846481		Housing-Blower -(Oil Cooler)
500	691086		WASHER -(Key Switch)
506	809957		Screw -(Carburetor/EFI Cover) -Used Before Code Date 11041300
529	690744		Grommet -(Magneto Armature Wires)
664	691087		NUT -(Key Switch)
668	841974		Spacer -(Blower Housing)
849	846236		Screw -(Stub Shaft) (M8x34mm) -Used After Code Date 14112600
849A	691088		Screw -(Stub Shaft) (5/16-18x1.1) -Used Before Code Date 14112700
849B	846235		Screw -(Stub Shaft) (M8x28mm) -Used After Code Date 14112600
879	809955		Cover-Carburetor/EFI
890	809987		Bracket-Support
892	692318		Switch-Key
990	691959		SET, Key
1005	846996		Fan-Flywheel -(Used With Rotating Screen) -Used After Code Date 15080600
1006	847198		Retainer-Fan
1059	845300		Kit-Screw/Washer -(Carburetor/EFI Cover) -Used After Code Date 11041200
1212	809958		Stud -(Blower Housing)
1332	809948		Washer -(Rotating Screen)
1335	690939		NUT -(Blower Housing)
1369	842858		Guard-Flywheel Fan
1370	841233		Screw -(Flywheel Fan Guard)
1371	841537		Nut -(Flywheel Fan Guard)

Not For Reproduction

Copyright © Briggs and Stratton. All Rights reserved

Mfg. No: 543477-0002-J1

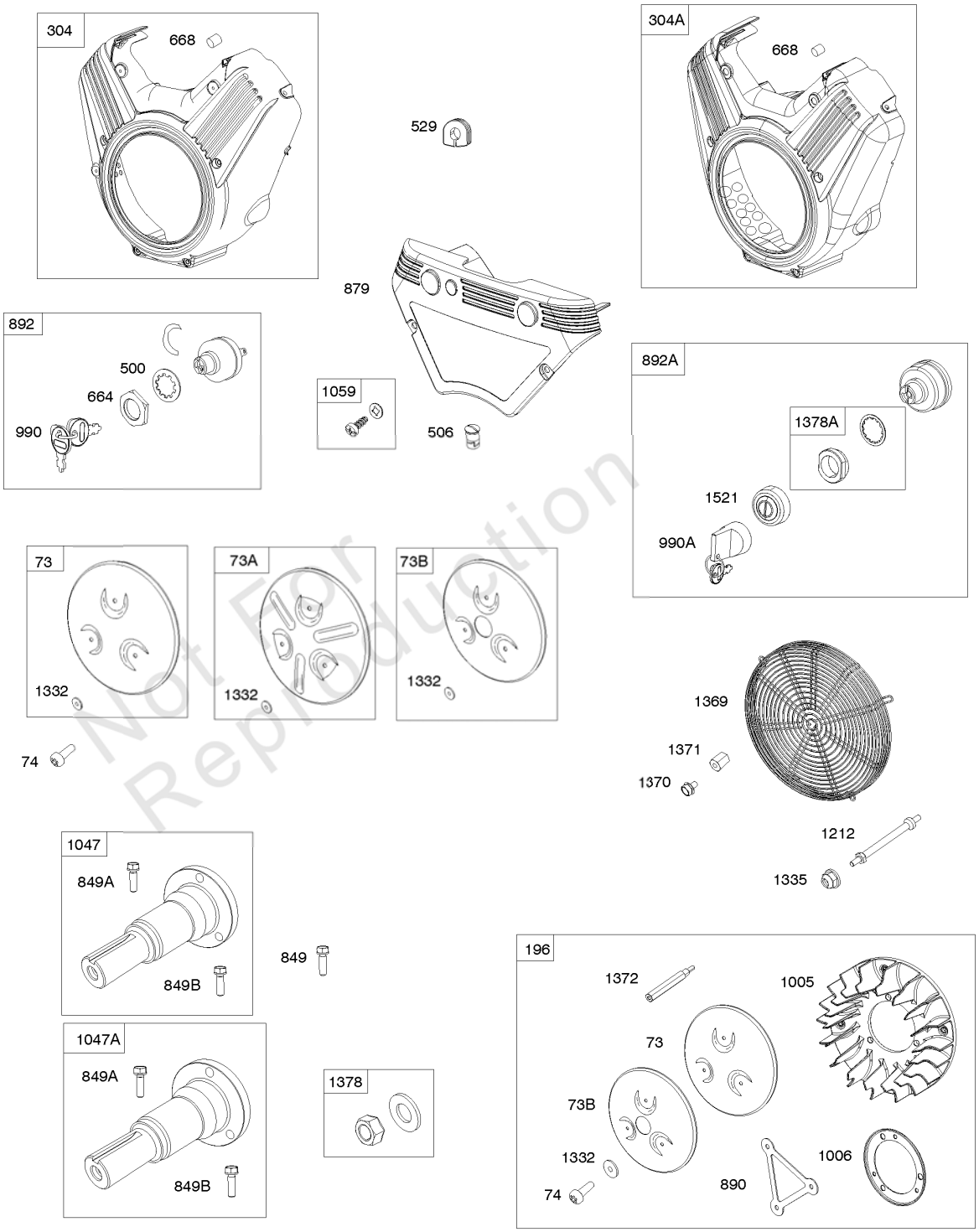

Not For Reproduction

REF NO	PART NO	QTY	DESCRIPTION
1372	809946		Stud -(Rotating Screen)
1378	844795		Washer/Nut Set -(Flywheel)

Not For Reproduction

Copyright © Briggs and Stratton. All Rights reserved

Mfg. No: 543477-0002-J1

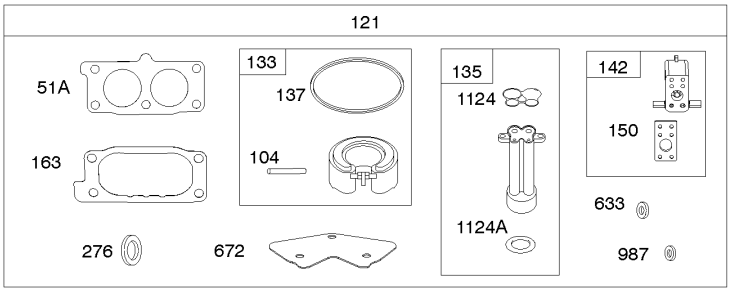

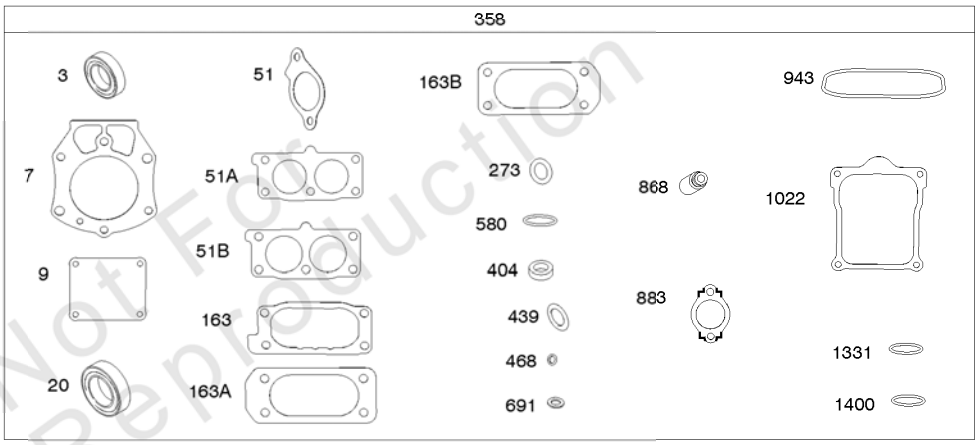

Not For Reproduction

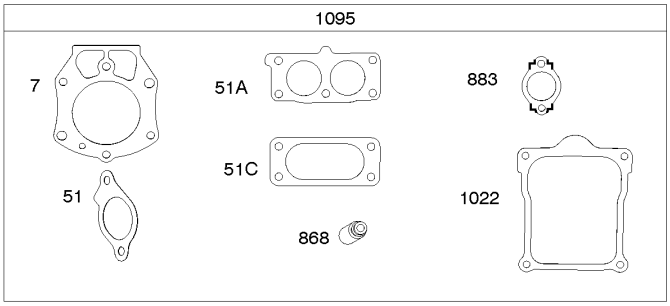

Copyright © Briggs and Stratton. All Rights reserved

Carburetor Overhaul Kit, Engine/Valve Gasket Sets

REF NO	PART NO	QTY	DESCRIPTION
3	841596		Seal-Oil -(Magneto Side)
7	809730		Gasket-Cylinder Head
9	842545		Gasket-Breather
20	841596		Seal-Oil -(PTO Side)
51	841592		Gasket-Intake -Used After Code Date 04031100
51A	809910		Gasket-Intake
51C	843455		Gasket-Intake
104	690882		Pin-Float Hinge
121	841548		Kit-Carburetor Overhaul
133	841545		Float-Carburetor
135	841646		Tube-Fuel Transfer
137	841651		Gasket-Float Bowl
142	699726		Nozzle-Carburetor -Used After Code Date 10121200
150	841649		GASKET, Nozzle
163	807375		Gasket-Air Cleaner
163A	843117		Gasket-Air Cleaner -Used After Code Date 06062200
273	690681		Seal-O Ring -(Oil Pump)
276	695410		WASHER, Sealing
358	841122		Gasket Set-Engine
404	809436		Washer -(Governor Crank)
439	692154		O Ring-Oil Gallery -(Crankcase Cover/Sump or Cylinder Assembly)
468	690690		Seal-O Ring -(Oil Pump Screen)
580	809894		Seal-O Ring -(Oil Fill Cap)
633	690722		SEAL, Choke/Throttle Shaft -(Choke Shaft)
672	841655		Gasket-Carburetor Plate
691	809287		Seal-Governor Shaft
868	691963		Seal-Valve
883	809872		Gasket-Exhaust
943	842538		Seal-O Ring -(Oil Pump Cover)
987	808183		Seal-Throttle Shaft
1022	809732		Gasket-Rocker Cover
1095	843713		Gasket Set-Valve
1124	841647		Seal-O Ring -(Fuel Transfer Tube)
1124A	841653		SEAL, O-Ring -(Fuel Transfer Tube)
1331	809894		Seal-O Ring -(Fuel Pump)
1400	809894		Seal-O Ring -(Fuel Pump Cover)

Not For Reproduction

Copyright © Briggs and Stratton. All Rights reserved

Mfg. No: 543477-0002-J1

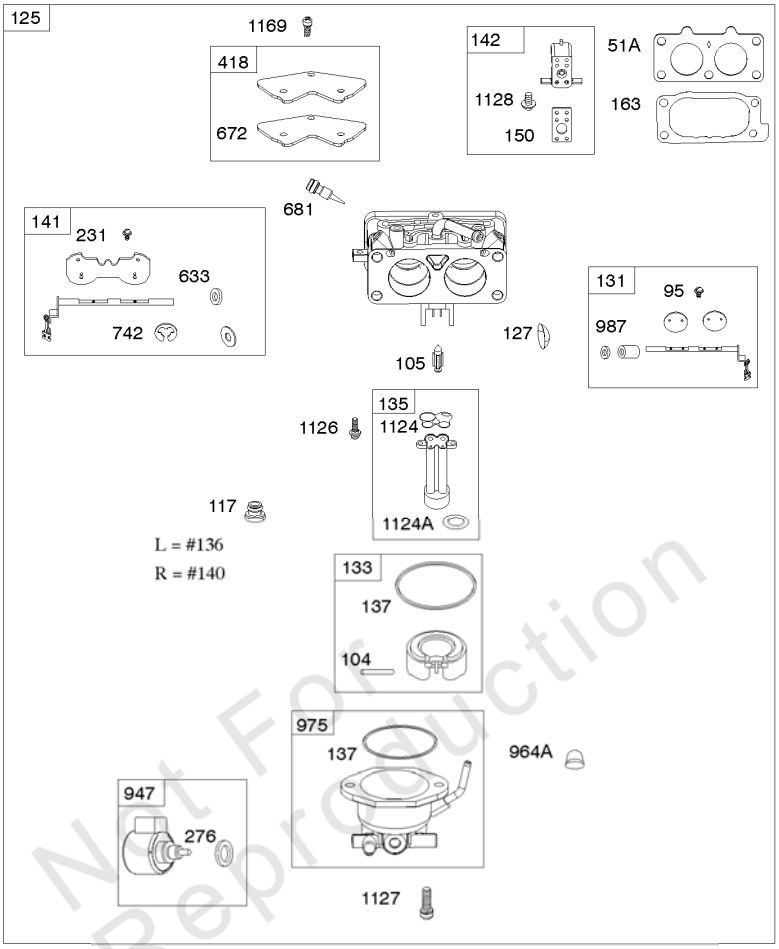

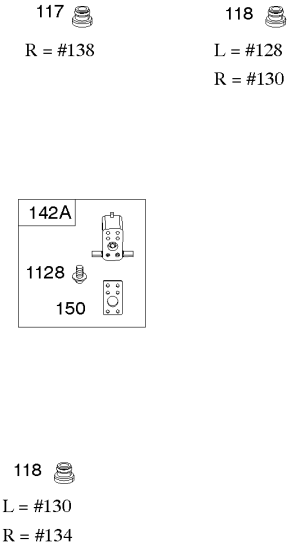

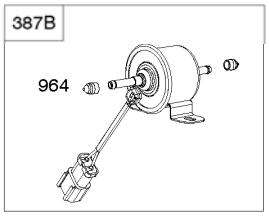

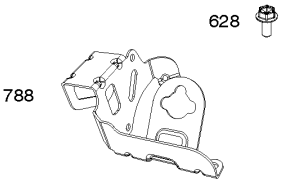

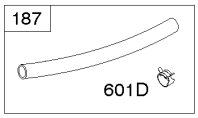

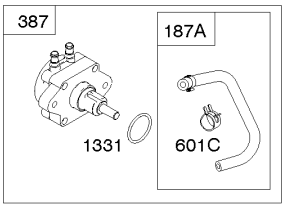

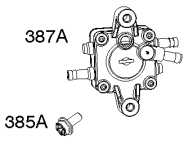

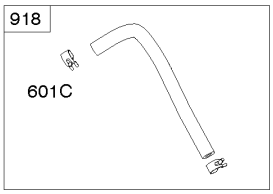

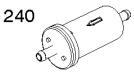

Not For Reproduction

Copyright © Briggs and Stratton. All Rights reserved

REF NO	PART NO	QTY	DESCRIPTION
51A	809910		Gasket-Intake
95	690718		SCREW -(Throttle Valve)
104	690882		Pin-Float Hinge
105	698537		VALVE, Float Needle
117	845289		Jet-Main -(Standard) (Right Jet) (#140)
117	842633		JET, Main -(Standard) (Left Jet) (#136)
117	842634		Jet-Main -(Standard) (Right Jet) (#138) -Used Before Code Date 10121200
118	842012		Jet-Main -(High Altitude) (Right Jet) (#134)
118	842139		Jet-Main -(High Altitude) (Left Jet) (#128) -Used Before Code Date 10121200
118	842629		Jet-Main -(High Altitude) (Right Jet) (#130)
118	842629		Jet-Main -(High Altitude) (Right Jet) (#130) -Used Before Code Date 10121200
127	844590		Plug-Welch
131	841551		Kit-Throttle Shaft
133	841545		Float-Carburetor
135	841646		Tube-Fuel Transfer
137	841651		Gasket-Float Bowl
141	844733		Kit-Choke Shaft -Used After Code Date 10043000
141A	841549		Kit-Choke Shaft -Used Before Code Date 10050100
142	699726		Nozzle-Carburetor -Used After Code Date 10121200
142A	841648		Nozzle-Carburetor
150	841649		GASKET, Nozzle
163	807375		Gasket-Air Cleaner
187	791745		Line-Fuel -(23 Inches Long)(Cut To Required Length)
187	791766		LINE, Fuel -(15 Inches Long)(Cut to Required Length)
187	841589		Line-Fuel -(35 Inches Long)(Cut To Required Length)
187A	844081		Line-Fuel -(Formed Hose)
231	690718		SCREW -(Choke Valve)
240	845125		FILTER, Fuel
276	695410		WASHER, Sealing
385	809876		Screw -(Fuel Pump) (M5x22mm)
385A	807084		Screw -(Fuel Pump) (M6x14mm)
387	844086		Pump-Fuel
387A	844527		Pump-Fuel
418	843346		Plate-Carburetor Cover
601C	691038		CLAMP, Hose -(Black)
601D	791850		CLAMP, Hose -(Green)

Not For Reproduction

Copyright © Briggs and Stratton. All Rights reserved

Mfg. No: 543477-0002-J1

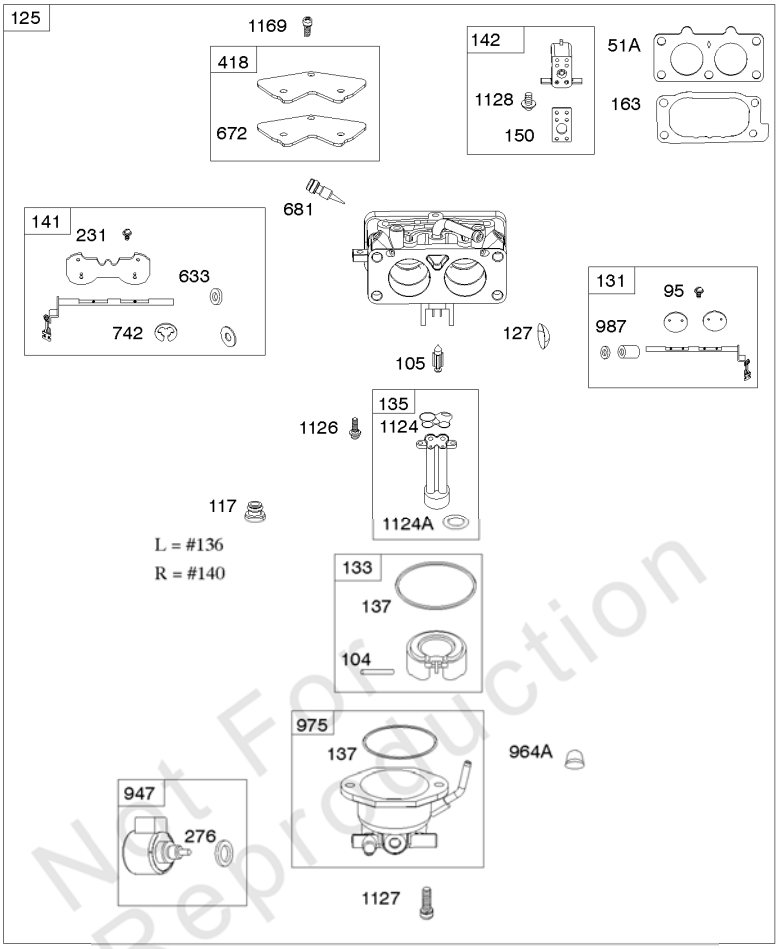

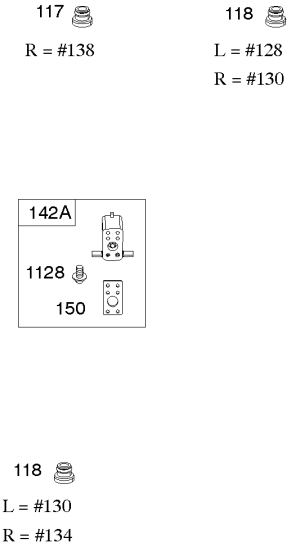

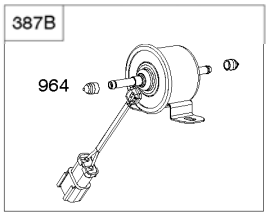

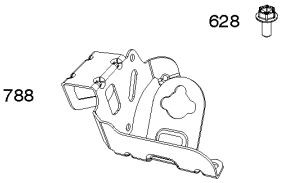

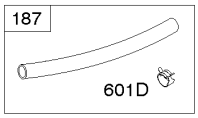

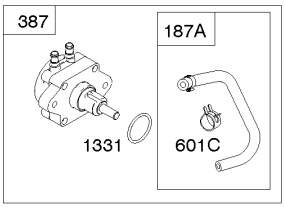

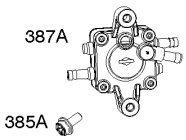

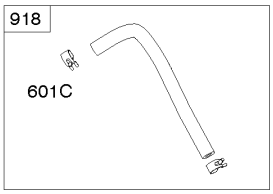

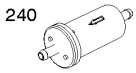

Not For Reproduction

Copyright © Briggs and Stratton. All Rights reserved

REF NO	PART NO	QTY	DESCRIPTION
633	690722		SEAL, Choke/Throttle Shaft -(Choke Shaft)
672	841655		Gasket-Carburetor Plate
681	845290		Kit-Needle Valve
742	807001		Retainer-E Ring -(Choke Shaft)
918	844525		Hose-Vacuum
947	841546		Solenoid-Fuel
964	590799		Cap-Connector
964A	807468		Cap-Connector -(Carburetor)
975	841650		Bowl-Float
987	808183		Seal-Throttle Shaft
1124	841647		Seal-O Ring -(Fuel Transfer Tube)
1124A	841653		SEAL, O-Ring -(Fuel Transfer Tube)
1126	841619		Screw -(Fuel Transfer Tube)
1127	841621		Screw -(Float Bowl to Carburetor Body)
1128	690990		SCREW -(Carburetor Nozzle)
1169	690990		SCREW -(Carburetor Cover Plate)
1331	809894		Seal-O Ring -(Fuel Pump)
1336	841015		SHIELD, Wire Protective

Not For Reproduction

Copyright © Briggs and Stratton. All Rights reserved

Mfg. No: 543477-0002-J1

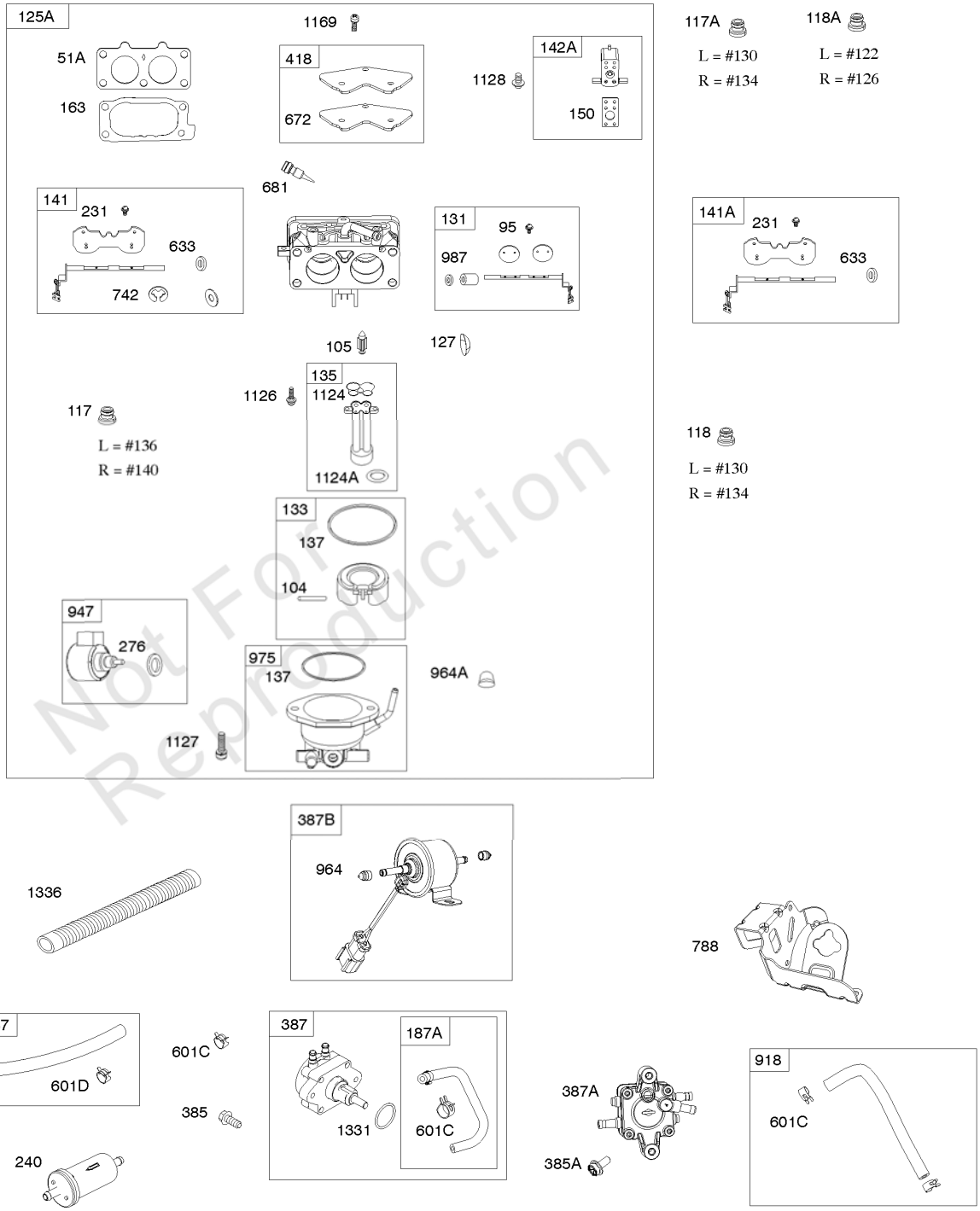

Not For Reproduction

REF NO	PART NO	QTY	DESCRIPTION
51A	809910		Gasket-Intake
95	690718		SCREW -(Throttle Valve)
104	690882		Pin-Float Hinge
105	698537		VALVE, Float Needle
117	842633		JET, Main -(Standard) (Left Jet) (#136)
117	842634		Jet-Main -(Standard) (Right Jet) (#138) -Used Before Code Date 10121200
117	845289		Jet-Main -(Standard) (Right Jet) (#140)
117A	842012		Jet-Main -(Standard) (Right Jet) (#134) -Used Before Code Date 11020800
117A	842629		Jet-Main -(Standard) (Left Jet) (#130) -Used Before Code Date 11020800
118	842139		Jet-Main -(High Altitude) (Left Jet) (#128) -Used Before Code Date 10121200
118	842629		Jet-Main -(High Altitude) (Right Jet) (#130)
118	842629		Jet-Main -(High Altitude) (Right Jet) (#130) -Used Before Code Date 10121200
118	842012		Jet-Main -(High Altitude) (Right Jet) (#134)
118A	842082		JET, Main -(High Altitude) (Right Jet) (#126) -Used Before Code Date 10050100
118A	842627		Jet-Main -(High Altitude) (Left Jet) (#122) -Used Before Code Date 10050100
125A	845276		Carburetor
127	844590		Plug-Welch
131	841551		Kit-Throttle Shaft
133	841545		Float-Carburetor
135	841646		Tube-Fuel Transfer
137	841651		Gasket-Float Bowl
141	844733		Kit-Choke Shaft -Used After Code Date 10043000
141A	841549		Kit-Choke Shaft -Used Before Code Date 10050100
142A	841648		Nozzle-Carburetor
150	841649		GASKET, Nozzle
163	807375		Gasket-Air Cleaner
187	791766		LINE, Fuel -(15 Inches Long)(Cut to Required Length)
187	841589		Line-Fuel -(35 Inches Long)(Cut To Required Length)
187	791745		Line-Fuel -(23 Inches Long)(Cut To Required Length)
187A	844081		Line-Fuel -(Formed Hose)
231	690718		SCREW -(Choke Valve)
240	845125		FILTER, Fuel
276	695410		WASHER, Sealing

Not For Reproduction

Copyright © Briggs and Stratton. All Rights reserved

Mfg. No: 543477-0002-J1

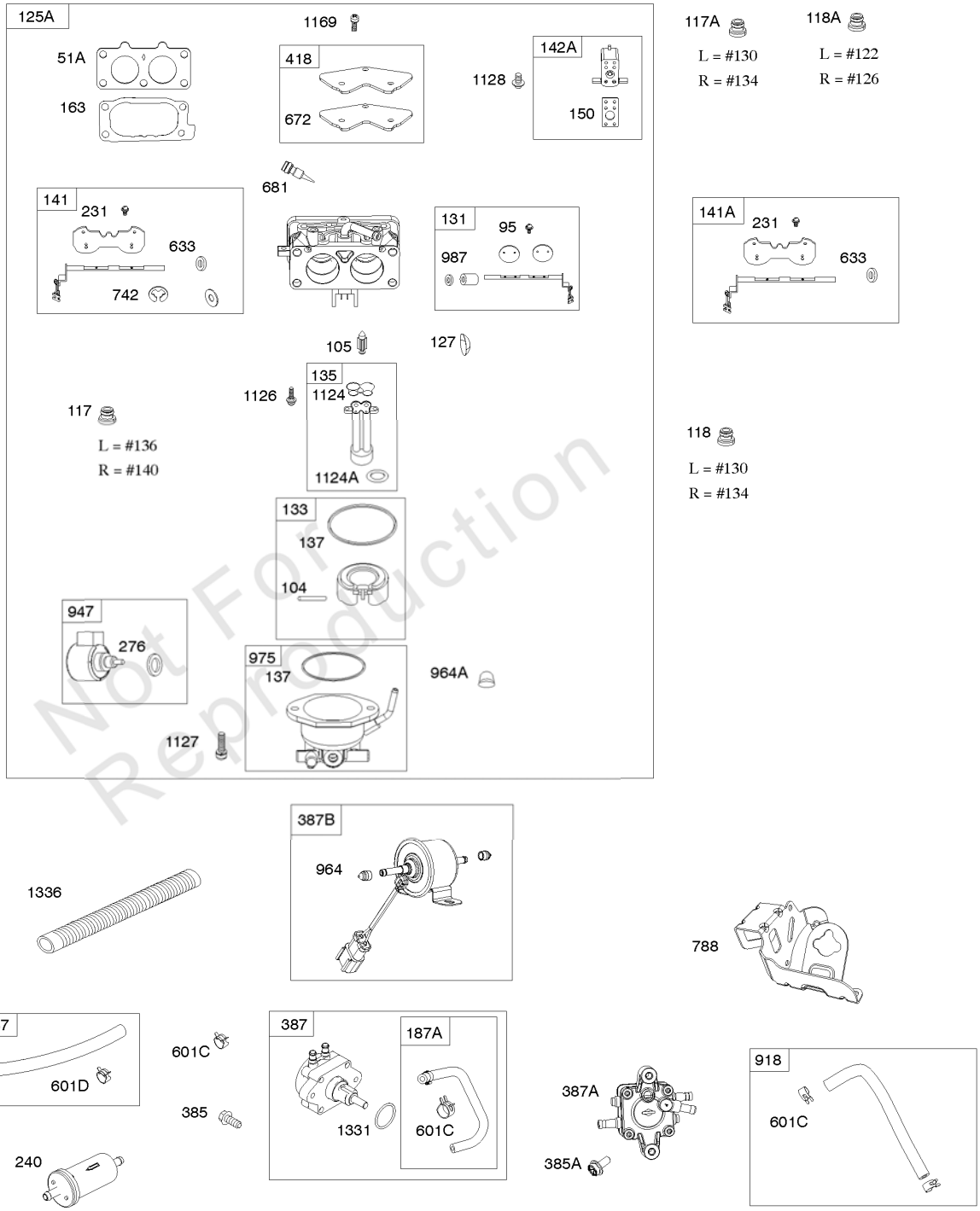

Not For Reproduction

REF NO	PART NO	QTY	DESCRIPTION
385	809876		Screw -(Fuel Pump) (M5x22mm)
385A	807084		Screw -(Fuel Pump) (M6x14mm)
387	844086		Pump-Fuel
387A	844527		Pump-Fuel
418	843346		Plate-Carburetor Cover
601C	691038		CLAMP, Hose -(Black)
601D	791850		CLAMP, Hose -(Green)
633	690722		SEAL, Choke/Throttle Shaft -(Choke Shaft)
672	841655		Gasket-Carburetor Plate
681	845290		Kit-Needle Valve
742	807001		Retainer-E Ring -(Choke Shaft)
918	844525		Hose-Vacuum
947	841546		Solenoid-Fuel
964	590799		Cap-Connector
964A	807468		Cap-Connector -(Carburetor)
975	841650		Bowl-Float
987	808183		Seal-Throttle Shaft
1124	841647		Seal-O Ring -(Fuel Transfer Tube)
1124A	841653		SEAL, O-Ring -(Fuel Transfer Tube)
1126	841619		Screw -(Fuel Transfer Tube)
1127	841621		Screw -(Float Bowl to Carburetor Body)
1128	690990		SCREW -(Carburetor Nozzle)
1169	690990		SCREW -(Carburetor Cover Plate)
1331	809894		Seal-O Ring -(Fuel Pump)
1336	841015		SHIELD, Wire Protective

Not For Reproduction

Copyright © Briggs and Stratton. All Rights reserved

Mfg. No: 543477-0002-J1

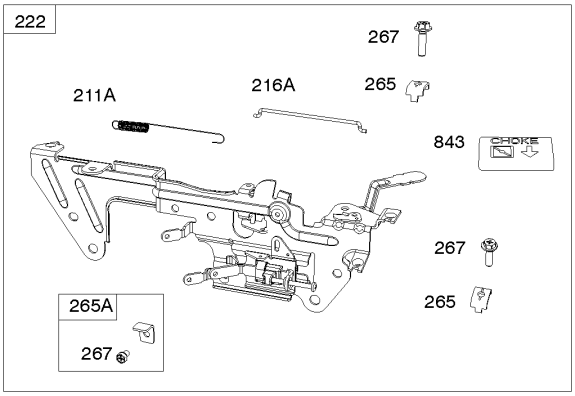

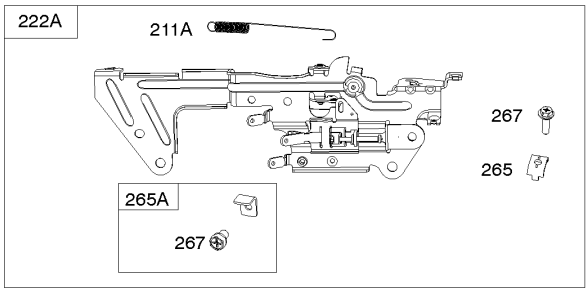

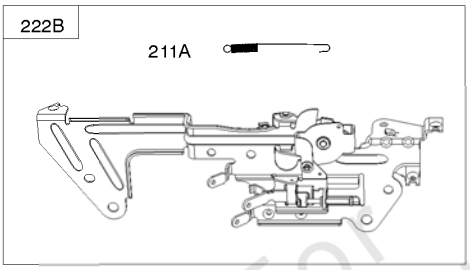

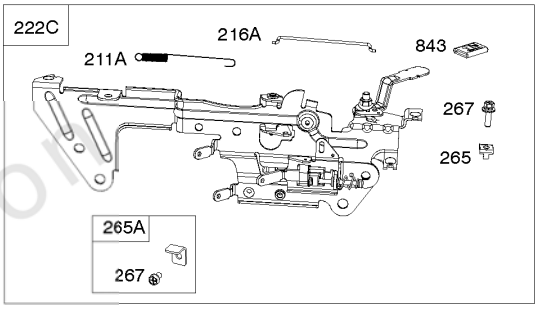

Not For Reproduction

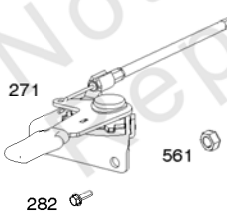

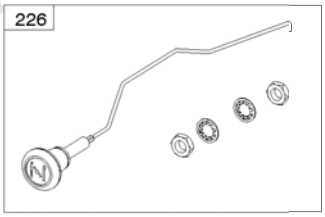

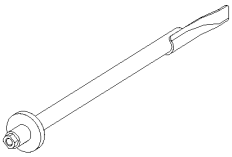

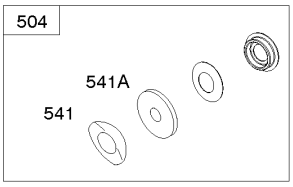

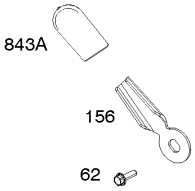

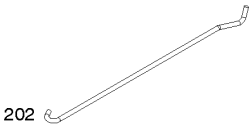

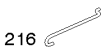

Copyright © Briggs and Stratton. All Rights reserved

Control Brackets, Links, Springs

REF NO	PART NO	QTY	DESCRIPTION
62	841233		Screw -(Speed Adjustor Lever) (M6x10mm)
156	841522		Lever-Speed Adjuster
188	841233		Screw -(Control Bracket) (M6x10mm)
188A	692062		Screw -(Control Bracket) (M6x18mm)
202	841322		Link-Mechanical Governor
209	841500		Spring-Governor -(Purple)
211	809875		Spring-Governed Idle -(White)
211A	690707		Spring-Governed Idle -(Control Bracket) (White)
216	809788		Link-Choke
216A	841671		Link-Choke -(Control Bracket)
222	841492		Bracket-Control
222A	841528		Bracket-Control
222B	841527		Bracket-Control
226	841613		Rod-Choke
232	690545		Spring-Governor Link
265	691024		CLAMP, Casing
265A	841673		Clamp-Casing
266	841521		Control-Throttle
267	841552		Screw -(Casing Clamp) (M5x20mm)
271	692541		Lever-Control
282	841552		Screw -(Control Lever) (M5x20mm)
504	846156		Washer Set-Friction -(Throttle Control)
541	841526		Washer -(Speed Adjuster Lever) (Wave Washer)
541A	841525		Washer -(Speed Adjuster Lever) (Flat Washer)
561	690713		Nut -(Control Lever)
717A	842730		Bracket-Air Cleaner
843	809672		Sleeve-Lever -(Control Bracket)
843A	842745		Sleeve-Lever -(Speed Adjuster Lever)

Not For Reproduction

Mfg. No: 543477-0002-J1

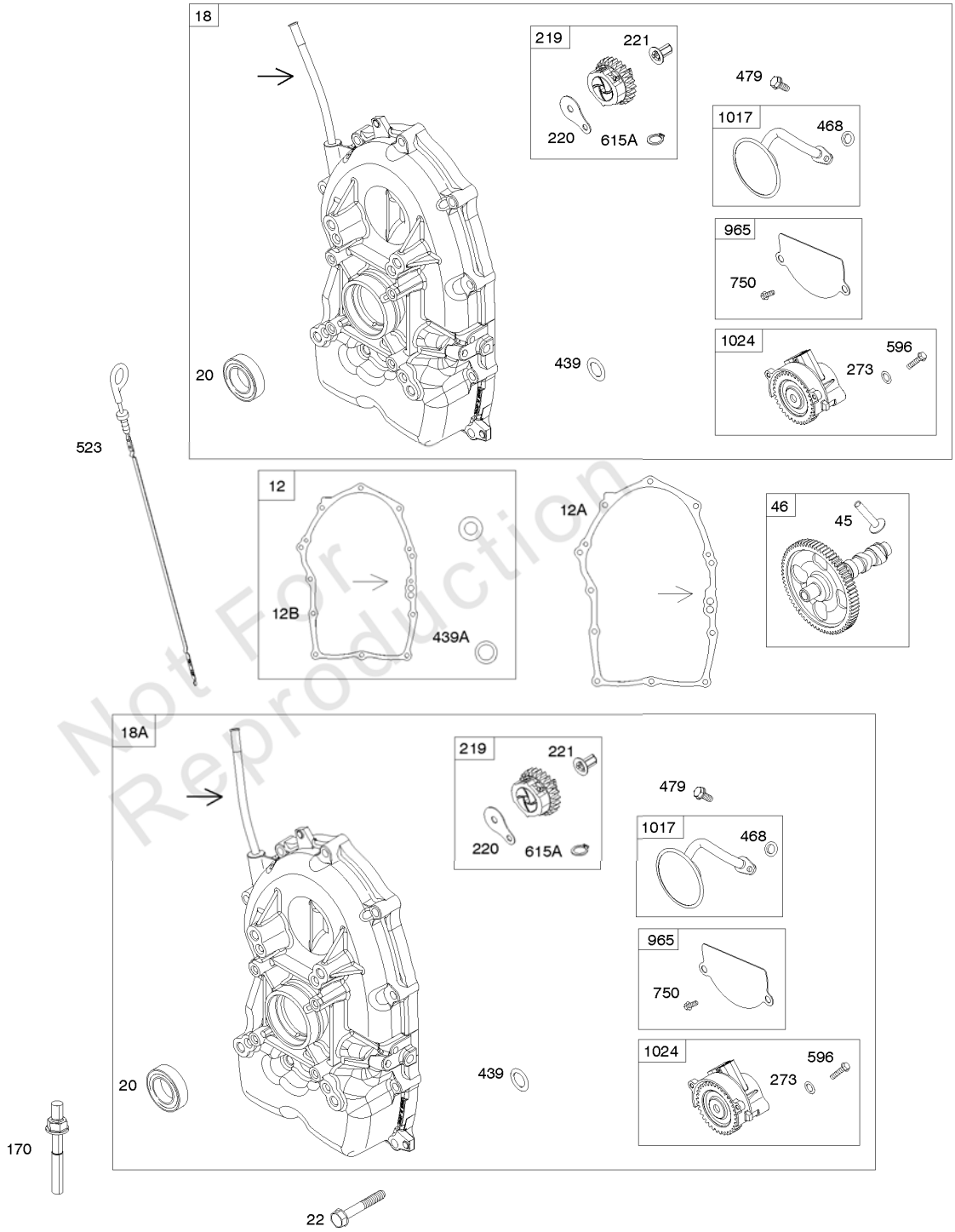

Not For Reproduction

Crankcase Covers, Camshaft

REF NO	PART NO	QTY	DESCRIPTION
12	846037		Gasket-Crankcase -Used After Code Date 13072100
12A	844107		Gasket-Crankcase -Used Before Code Date 13072200
12B	843969		Gasket-Crankcase -Used After Code Date 13072100
18	844792		Cover-Crankcase
20	841596		Seal-Oil -(PTO Side)
22	807362		Screw -(Crankcase Cover/Sump) (M8x50mm)
45	809785		Tappet-Valve
46	809879		Camshaft
219	809426		Gear-Governor
220	841608		Washer -(Governor Gear)
221	841026		CUP, Governor
273	690681		Seal-O Ring -(Oil Pump)
439	692154		O Ring-Oil Gallery -(Crankcase Cover/Sump or Cylinder Assembly)
439A	846027		O Ring-Oil Gallery -(Crankcase Cover/Sump or Cylinder Assembly) -Used After Code Date 13072100
468	690690		Seal-O Ring -(Oil Pump Screen)
479	807084		Screw -(Oil Pump Screen)
523	841007		Dipstick
596	691492		Screw -(Oil Pump)
615A	698290		RETAINER, Governor Shaft -(Crankcase Cover/Sump)
750	841233		Screw -(Oil Pump Cover)
965	809422		Cover-Oil Pump
1017	809421		Screen-Oil Pump
1024	845983		Pump-Oil

Not For Reproduction

Copyright © Briggs and Stratton. All Rights reserved

Mfg. No: 543477-0002-J1

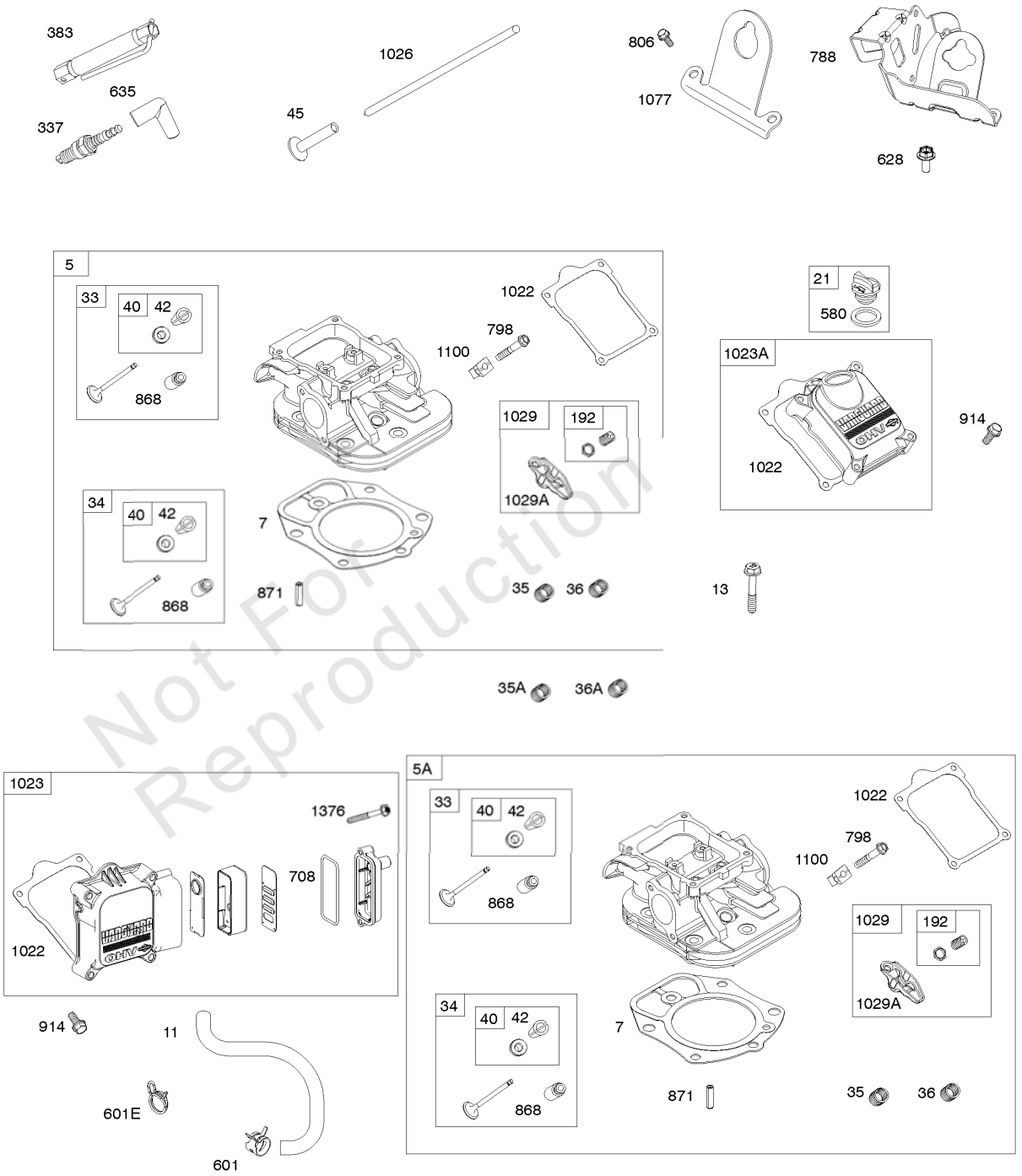

Not For Reproduction

REF NO	PART NO	QTY	DESCRIPTION
5	845588		Head-Cylinder -(Cylinder #1)
5A	845590		Head-Cylinder -(Cylinder #2)
7	809730		Gasket-Cylinder Head
11	809736		Tube-Breather
13	809784		Screw -(Cylinder Head) (M9x70mm)
21	843464		Cap-Oil Fill
33	844787		Valve-Exhaust
34	843730		Valve-Intake
35	845589		Spring-Valve -(Intake) (Intake) (Pink)
35A	809374		Spring-Valve -(Intake) (Intake) (White)
36	845589		Spring-Valve -(Exhaust) (Exhaust) (Pink)
36A	809374		Spring-Valve -(Exhaust) (Exhaust) (White)
40	844788		Retainer-Valve
42	807683		Keeper-Valve
45	809785		Tappet-Valve
192	690083		ADJUSTER. Rocker Arm
337	491055S		Plug-Spark -(RC12YC - RESISTOR)
337	792015		PLUG, Spark -(XC92YC - RESISTOR - EMS)
383	19576S		WRENCH, Spark Plug
580	809894		Seal-O Ring -(Oil Fill Cap)
601	844405		Clamp-Hose -(Breather Tube) -Used After Code Date 07121300
601E	841499		Clamp-Hose -(Breather Tube) -Used Before Code Date 07121400
635	692076		BOOT, Spark Plug
708	841301		Seal-O Ring -(Breather Reed)
798	691492		Screw -(Rocker Arm) (M6x18mm)
806	807357		Screw -(Lifting Bracket) (M6x40mm)
868	691963		Seal-Valve
871	692057		Bushing-Valve Guide
914	807357		Screw -(Rocker Cover)
1022	809732		Gasket-Rocker Cover
1023	809789		Cover-Rocker -(Rocker Cover #2)
1023A	809731		Cover-Rocker -(Rocker Cover #1)
1026	809783		Rod-Push -(Intake and Exhaust)
1029	690972		ARM, Rocker
1029A	807323		ARM, Rocker
1077	809729		Bracket-Lifting

Not For Reproduction

Copyright © Briggs and Stratton. All Rights reserved

Mfg. No: 543477-0002-J1

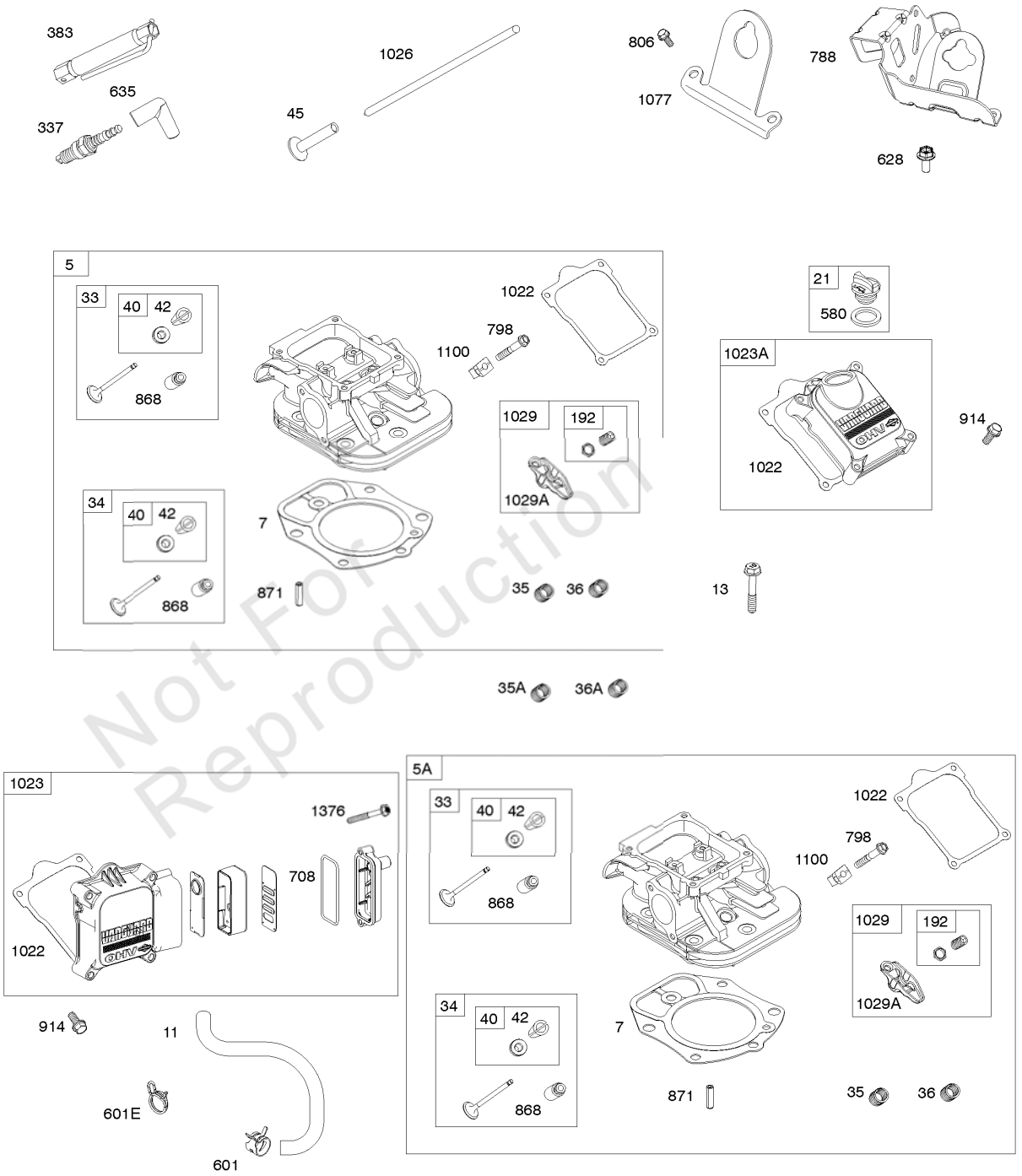

Not For Reproduction

REF NO	PART NO	QTY	DESCRIPTION
1100	791959		PIVOT, Rocker Arm
1376	806421		Screw -(Breather Reed Cover)

Not For Reproduction

Copyright © Briggs and Stratton. All Rights reserved

Mfg. No: 543477-0002-J1

1036 | 1319 | 1330

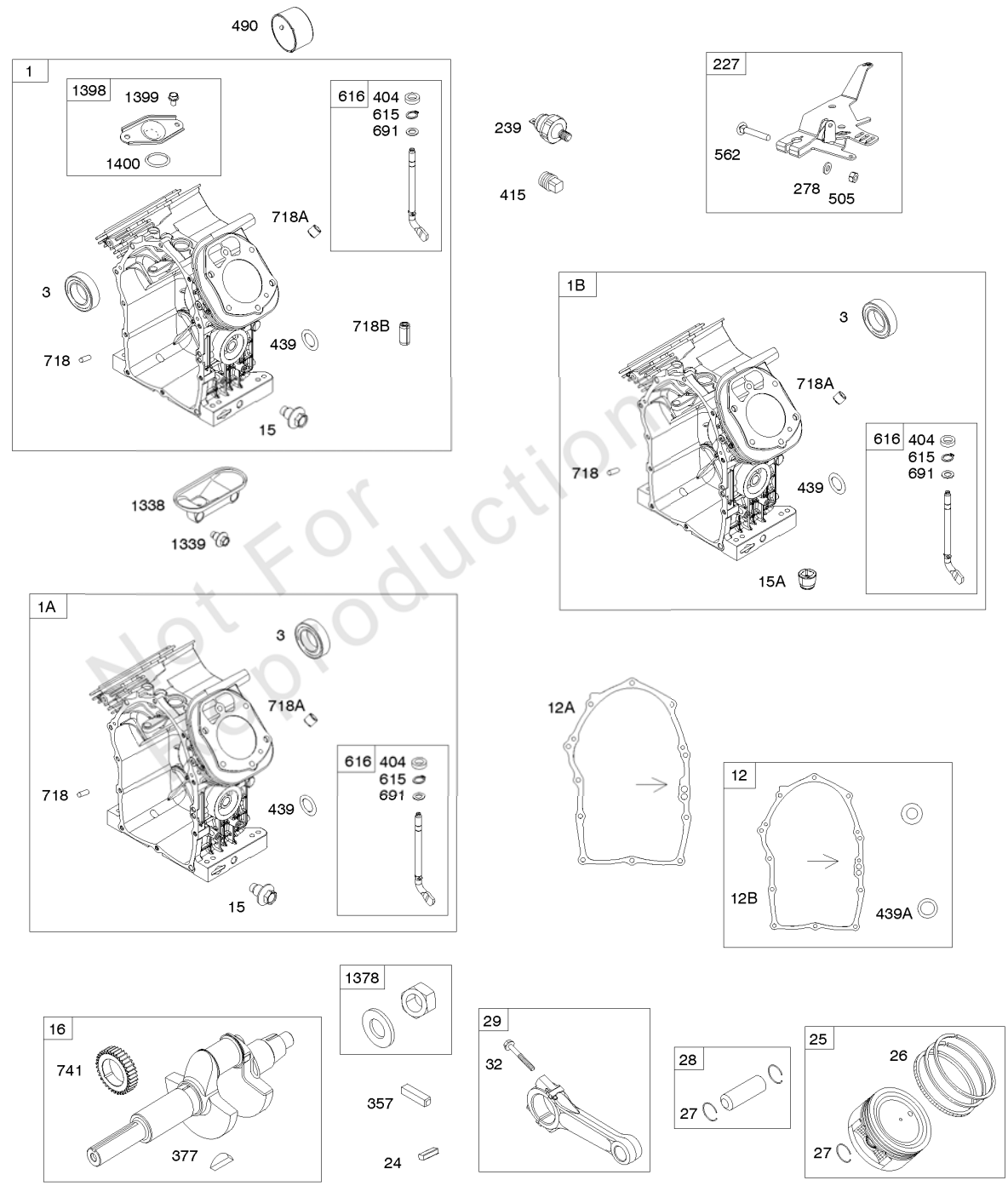

Not For Reproduction

REF NO	PART NO	QTY	DESCRIPTION
1	845756		Cylinder Assembly
3	841596		Seal-Oil -(Magneto Side)
12	846037		Gasket-Crankcase -Used After Code Date 13072100
12A	844107		Gasket-Crankcase -Used Before Code Date 13072200
12B	843969		Gasket-Crankcase -Used After Code Date 13072100
15	807392		Plug-Oil Drain
16	843288		Crankshaft -Used After Code Date 06083100
24	796335		KEY, Flywheel -(Steel) -Used After Code Date 07122700
24	222698S		KEY, Flywheel -(Aluminum) -Used Before Code Date 07122800
25	809790		Piston Assembly -(Standard)
25	841931		Piston Assembly -(.020" Oversize)
26	809972		Ring Set -(Standard)
26	841932		Ring Set -(.020" Oversize)
27	807351		Lock-Piston Pin
28	807361		Pin-Piston
29	809275		Rod-Connecting
32	807363		Screw -(Connecting Rod)
227	809984		Lever-Governor Control
239	841281		Switch-Oil Pressure
278	842122		Washer -(Governor Control Lever)
377	691639		Key-Woodruff
404	809436		Washer -(Governor Crank)
415	794903		PLUG
439	692154		O Ring-Oil Gallery -(Crankcase Cover/Sump or Cylinder Assembly)
439A	846027		O Ring-Oil Gallery -(Crankcase Cover/Sump or Cylinder Assembly) -Used After Code Date 13072100
490	843433		Bearing-Magneto Side
505	844752		Nut -(Governor Control Lever)
562	843344		Bolt -(Governor Control Lever)
615	809533		Retainer-Governor Shaft -(Cylinder)
616	844180		Crank-Governor
691	809287		Seal-Governor Shaft
718	690959		GASKET, Exhaust -(Cylinder)
718A	809508		Pin-Locating -(Cylinder Head)
718B	845925		Pin-Locating -(Cylinder) (Spiral)

Not For Reproduction

Copyright © Briggs and Stratton. All Rights reserved

Mfg. No: 543477-0002-J1

1036 | 1319 | 1330

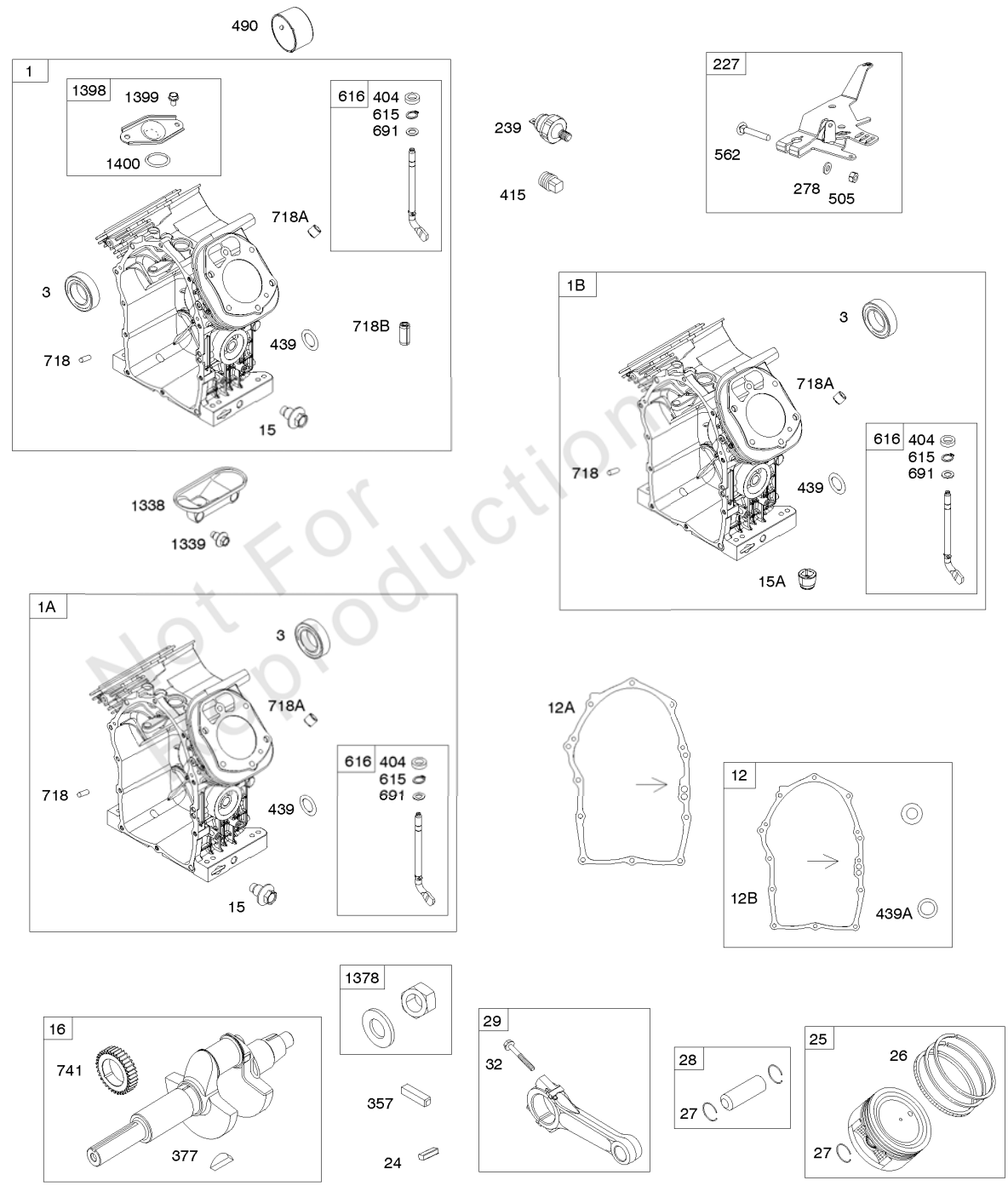

Not For Reproduction

REF NO	PART NO	QTY	DESCRIPTION
741	809432		Gear-Timing
1036	-		Label-Emissions -(Available From A Briggs & Stratton Authorized Dealer)
1319	794467		LABEL, Warning
1330	272144		Repair Manual
1338	809334		Tray-Oil Drip
1339	807435		Screw -(Oil Drip Tray)
1378	844795		Washer/Nut Set -(Flywheel)
1398	842191		Cover-Fuel Pump
1399	690932		Screw -(Fuel Pump Cover)
1400	809894		Seal-O Ring -(Fuel Pump Cover)

Not For Reproduction

Copyright © Briggs and Stratton. All Rights reserved

Mfg. No: 543477-0002-J1

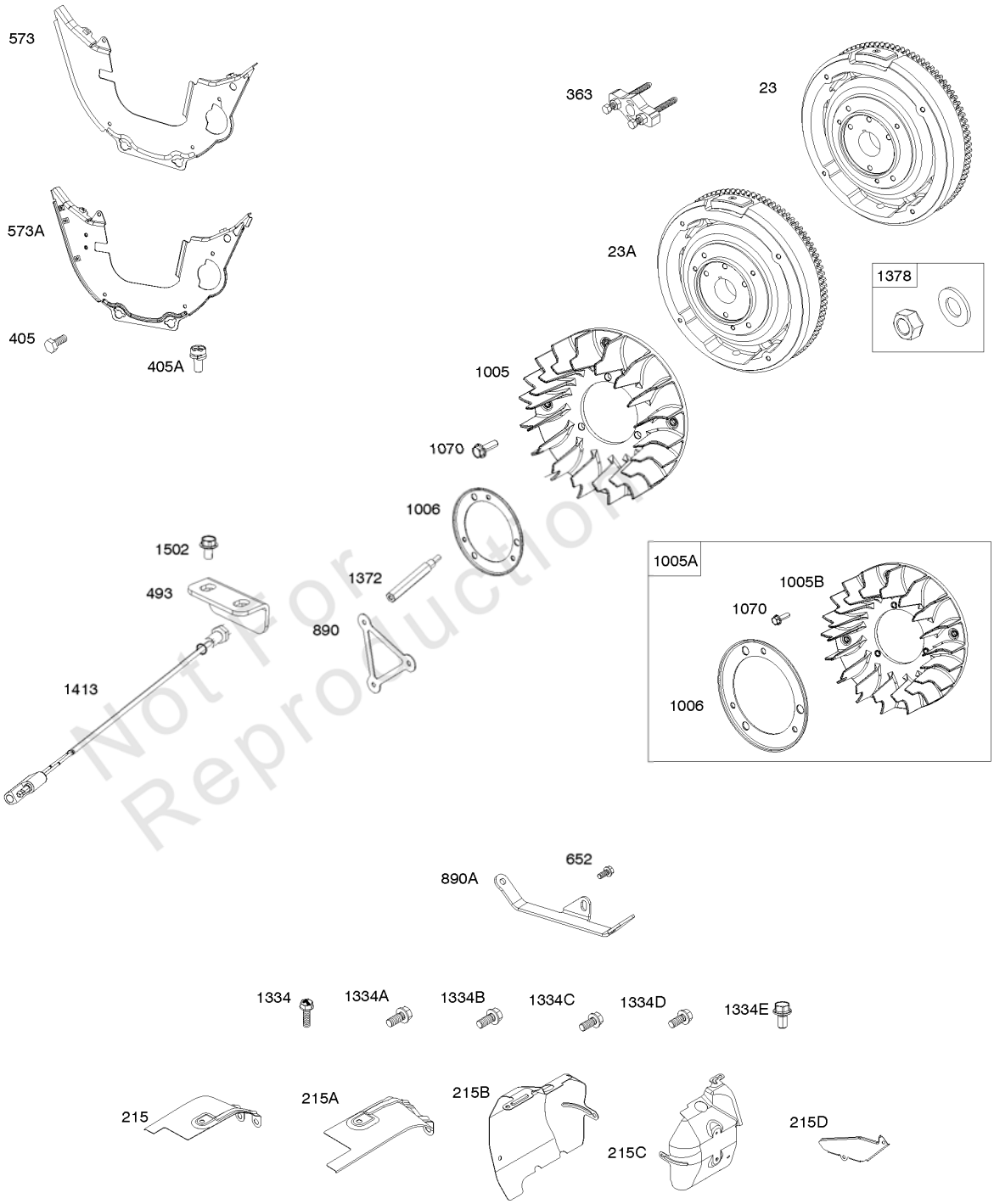

Not For Reproduction

REF NO	PART NO	QTY	DESCRIPTION
23	844385		Flywheel
215	809728		Guide-Air -(Cylinder #1)
215A	809737		Guide-Air -(Cylinder #2)
215C	809738		Guide-Air -(Cylinder #1)
215D	809739		Guide-Air -(Valley)
215B	809897		Guide-Air -(Cylinder #2)
363	19203		PULLER, Flywheel
405	841233		Screw -(Back Plate) (M6x10mm)
405A	841735		Screw -(Back Plate) (M6x14mm) -Used After Code Date 14121500
493	842713		Bracket-Mounting
573A	842712		Plate-Back -(With Weld Nuts)
652	807084		Screw -(Support Bracket)
890	809987		Bracket-Support
890A	841614		Bracket-Support
1005	846996		Fan-Flywheel -(Used With Rotating Screen) -Used After Code Date 15080600
1005A	847199		Fan-Flywheel -Used Before Code Date 15080700
1006	847198		Retainer-Fan
1070	807435		Screw -(Flywheel Fan) (M6x20mm)
1334	807435		Screw -(Air Guide) (M4x20mm)
1334A	841233		Screw -(Air Guide) (M6x10mm)
1334B	692062		Screw -(Air Guide) (M8x18mm)
1334D	807084		Screw -(Air Guide) (M4x14mm)
1334C	690677		Screw -(Air Guide) (M4x12mm)
1334E	692056		Screw -(Air Guide) (M8x14mm)
1372	809946		Stud -(Rotating Screen)
1378	844795		Washer/Nut Set -(Flywheel)

Not For Reproduction

Copyright © Briggs and Stratton. All Rights reserved

Mfg. No: 543477-0002-J1

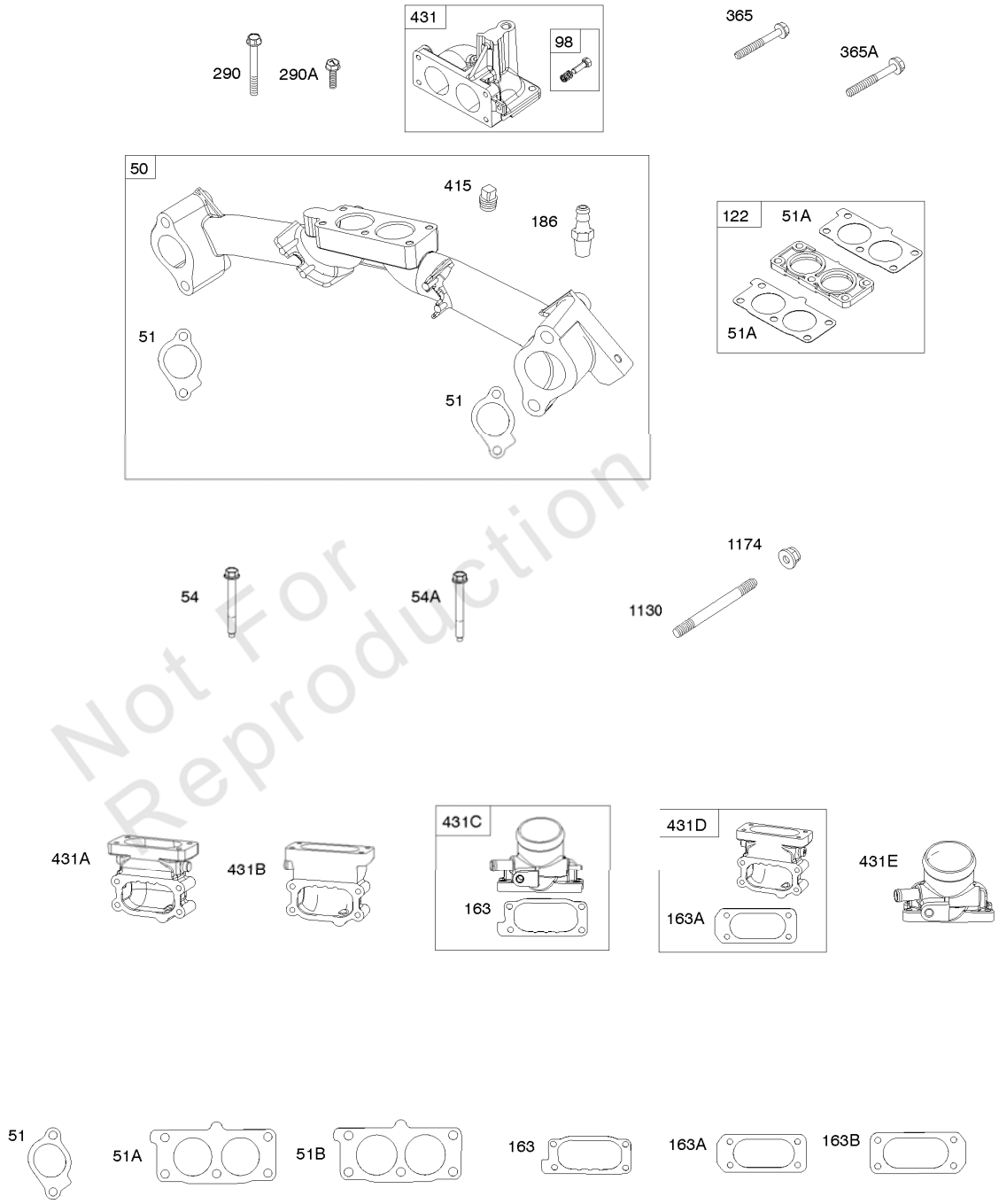

Not For Reproduction

Intake Manifold, Intake Elbows, Gaskets

REF NO	PART NO	QTY	DESCRIPTION
50	844340		Manifold-Intake -Used After Code Date 08123100
51	841592		Gasket-Intake -Used After Code Date 04031100
51A	809910		Gasket-Intake
54	844656		Screw -(Intake Manifold) (M8x72mm) -Used After Code Date 09073100
54A	691537		Screw -(Intake Manifold) (M6x70mm) -Used Before Code Date 04031200
98	841842		Kit-Idle Speed -(Intake Elbow)
122	846245		Spacer-Carburetor
163	807375		Gasket-Air Cleaner
163A	843117		Gasket-Air Cleaner -Used After Code Date 06062200
186	844568		Connector-Hose -(Intake Manifold)
290	809911		Screw -(Intake Elbow) (M6x55mm)
290A	807421		Screw -(Intake Elbow) (M6x25mm)
365	807437		Screw -(Carburetor/Throttle Body) (M6x85mm)
365A	841853		Screw -(Carburetor/Throttle Body) (M6x103mm)
415	794903		PLUG
431D	845505		Elbow-Intake
1130	841590		Stud -(Intake Manifold) -Used After Code Date 04031100 -Used Before Code Date 10093000
1174	842067		Nut -(Intake Manifold) -Used After Code Date 04031100 -Used Before Code Date 10093000

Not For Reproduction

Mfg. No: 543477-0002-J1

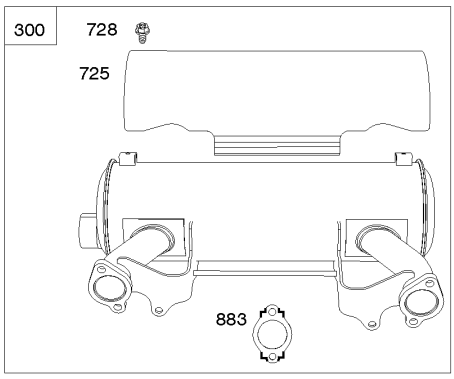

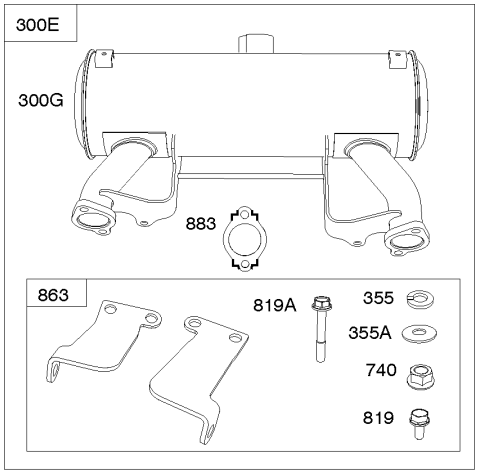

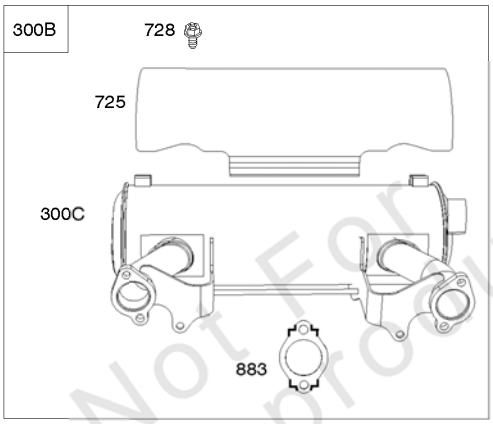

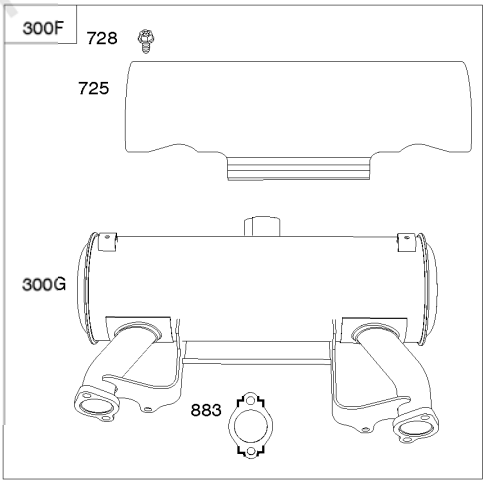

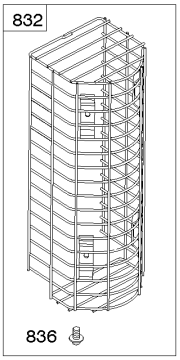

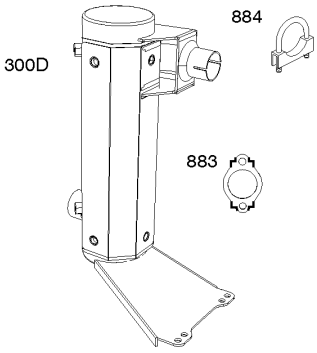

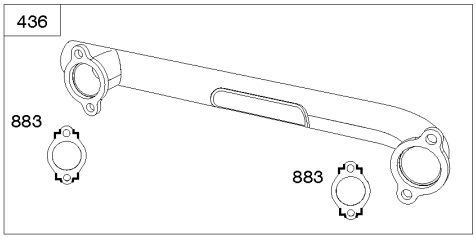

Not For Reproduction

Copyright © Briggs and Stratton. All Rights reserved

Mufflers, Exhaust Manifold

REF NO	PART NO	QTY	DESCRIPTION
300	846153		Muffler -(Oil Filter Side Outlet)
300B	845741		Muffler -(Starter Motor Side Outlet)
300C	846283		Muffler -(Starter Motor Side Outlet)
355	691075		Washer -(Muffler Bracket) (Lockwasher)
355A	844035		Washer -(Muffler Bracket) (Flat Washer)
437	809743		Screw -(Exhaust Manifold) (M8x25mm)
613	692062		Screw -(Muffler) (M6x18mm)
725	841132		Shield-Heat
728	692067		Screw -(Heat Shield) (M6x12mm)
740	690941		NUT -(Muffler Bracket)
819	692062		Screw -(Muffler Bracket) (M8x18mm)
819A	807362		Screw -(Muffler Bracket) (M6x50mm)
863	843487		Bracket-Muffler
883	809872		Gasket-Exhaust

Not For Reproduction

Copyright © Briggs and Stratton. All Rights reserved

Mfg. No: 543477-0002-J1

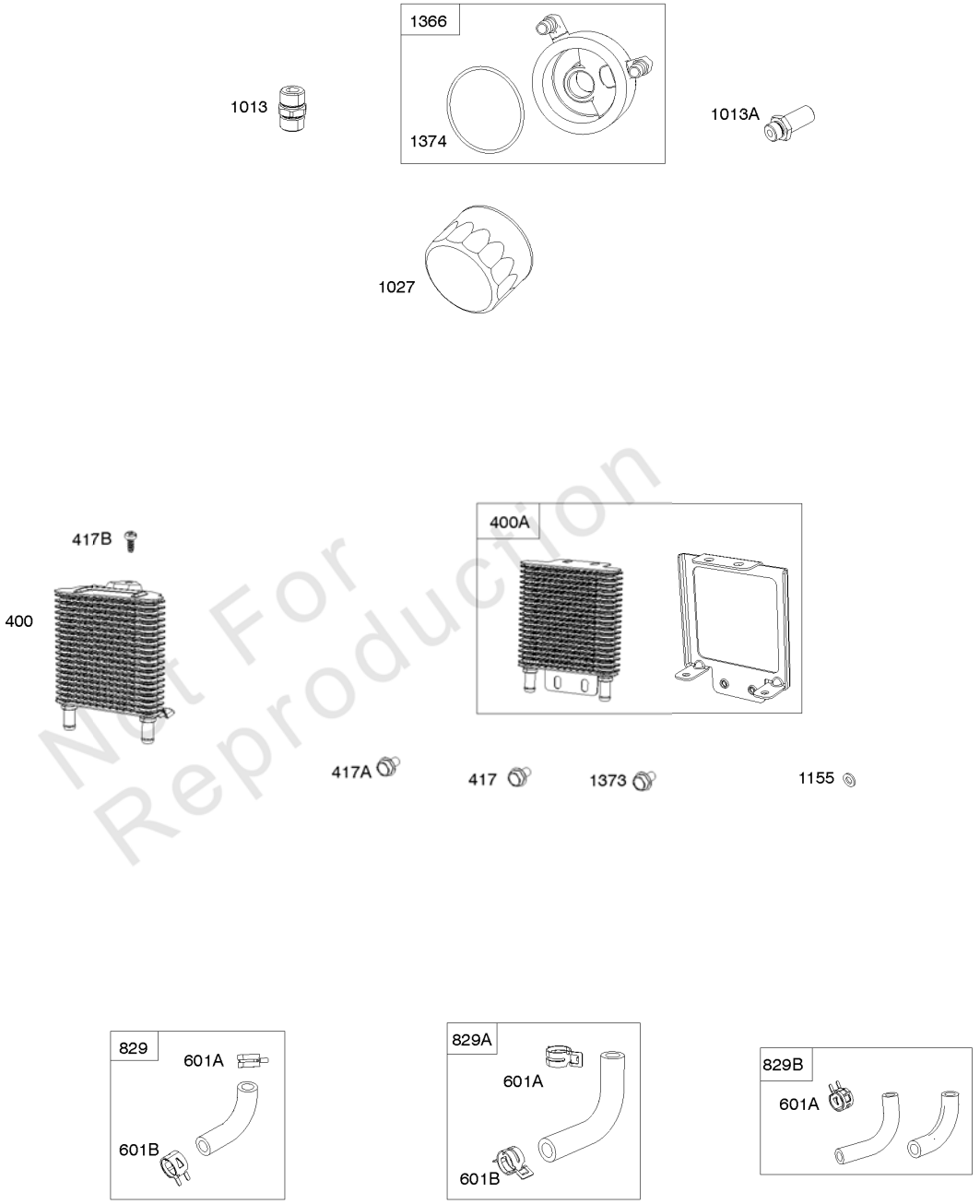

Not For Reproduction

Oil Coolers, Filter, Oil Cooler Hoses

REF NO	PART NO	QTY	DESCRIPTION
400	846249		Cooler-Oil -Used After Code Date 14022600
400A	846489		Cooler-Oil -Used Before Code Date 14022700
417	841233		Screw -(Oil Cooler) (M6x10mm) -Used After Code Date 13072600
417A	843345		Screw -(Oil Cooler) (M6x8mm) -Used Before Code Date 13072700
417B	846250		Screw -(Oil Cooler) (M6x16mm)
601A	841597		CLAMP, Hose -(Oil Cooler Hose)
601B	845209		Clamp-Hose -(Oil Cooler Hose)
829	846247		Hose-Oil Cooler -Used After Code Date 15052200
829A	846248		Hose-Oil Cooler -Used After Code Date 14052200
829B	846155		Hose-Oil Cooler -Used Before Code Date 15052300
1013	809505		Nipple-Oil Filter
1013A	841602		Nipple-Oil Filter
1027	842921		Filter-Oil
1155	806647		Washer -(Oil Cooler) -Used Before Code Date 13072700
1366	841510		Diverter-Oil Cooler
1373	841233		Screw -(Oil Cooler Bracket)
1374	841506		Seal-O Ring -(Oil Cooler Diverter)

Not For Reproduction

Copyright © Briggs and Stratton. All Rights reserved

Mfg. No: 543477-0002-J1

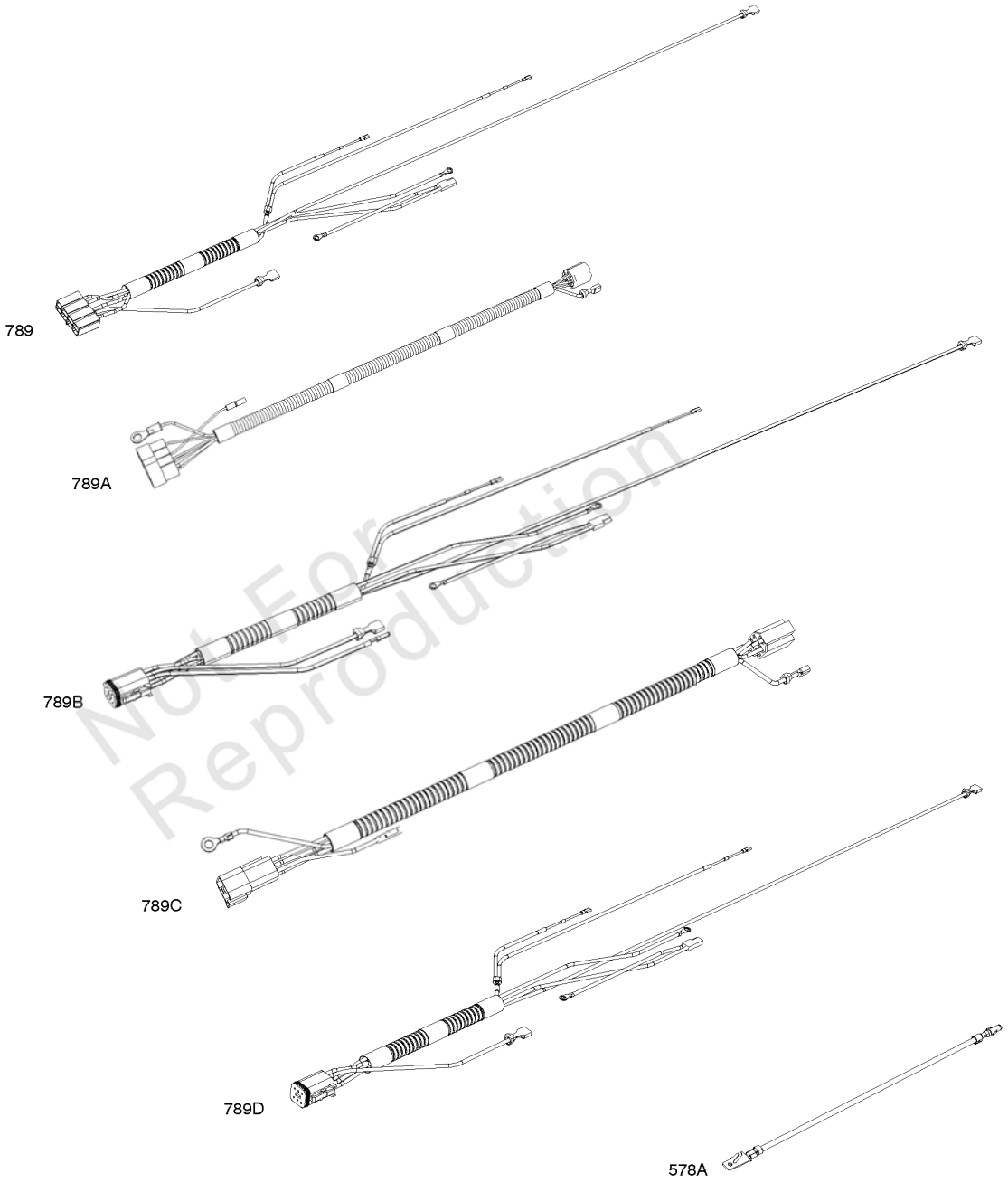

Not For Reproduction

Copyright © Briggs and Stratton. All Rights reserved

Wire Harness's, Wire Assembly

REF NO	PART NO	QTY	DESCRIPTION
578A	847202		Wire Assembly -(Wire Harness to Regulator) (Red)
789	809906		Harness-Wiring -Used Before Code Date 15110200
789	847060		Harness-Wiring -Used After Code Date 15110100
789A	809967		Harness-Wiring

Not For Reproduction

Copyright © Briggs and Stratton. All Rights reserved