POWER SOLUTIONS INTERNATIONAL

8.8L ENGINE PARTS BOOK

Engine Model: PSI 8.8L, T, CAC
Engine Family: PSI, Industrial
Engine Spec N.: 39002094
Parts Book Revision: June, 2015

TABLE OF CONTENTS

SECTION	PAGE
CYLINDER HEAD	4
VALVE ACTUATION	5
ENGINE COVER	6
WATER PUMP	7
COOLANT CROSSOVER	8
INTAKE MANIFOLD	9
FLYWHEEL	10
SENSORS AND SPARK PLUGS	11
CYLINDER BLOCK	12
CRANKSHAFT	13
CAMSHAFT	14
PISTON AND ROD	15
OIL PUMP	16
OIL PUMP DRIVE	17
CRANKSHAFT BALANCER	18
FRONT COVER	19
OIL PAN	20

Power Solutions International
201 Mittel Dr., Wood Dale, IL 60191 | Te. +10 630 350 9400 | Fax. +1 630 350 9588
Web: www.psiengines.com | email: parts@psiengines.com

TABLE OF CONTENTS

SECTION	PAGE
DIPSTICK AND TUBE	21
STARTER	22
ALTERNATOR	23-24
THROTTLE BODY	25
TURBOCHARGER	26
FUEL	27
EPR AND MIZER	28
TURBO INLET	29
BREATHER	30
WIRING	31
FLYWHEEL ADAPTER	32
FLYWHEEL HOUSING	33
STARTER ADAPTER	34
FAN SPACER	35
FRONT MOUNT	36
LIFT EYE	37
EXHAUST TUBES	38
TURBO EXHAUST ADAPTER	39
ENGINE COOLANT OUTLET	40
EXHAUST MANIFOLD	41

Power Solutions International
201 Mittel Dr., Wood Dale, IL 60191 | Te. +10 630 350 9400 | Fax. +1 630 350 9588
Web: www.psiengines.com | email: parts@psiengines.com

CYLINDER HEAD

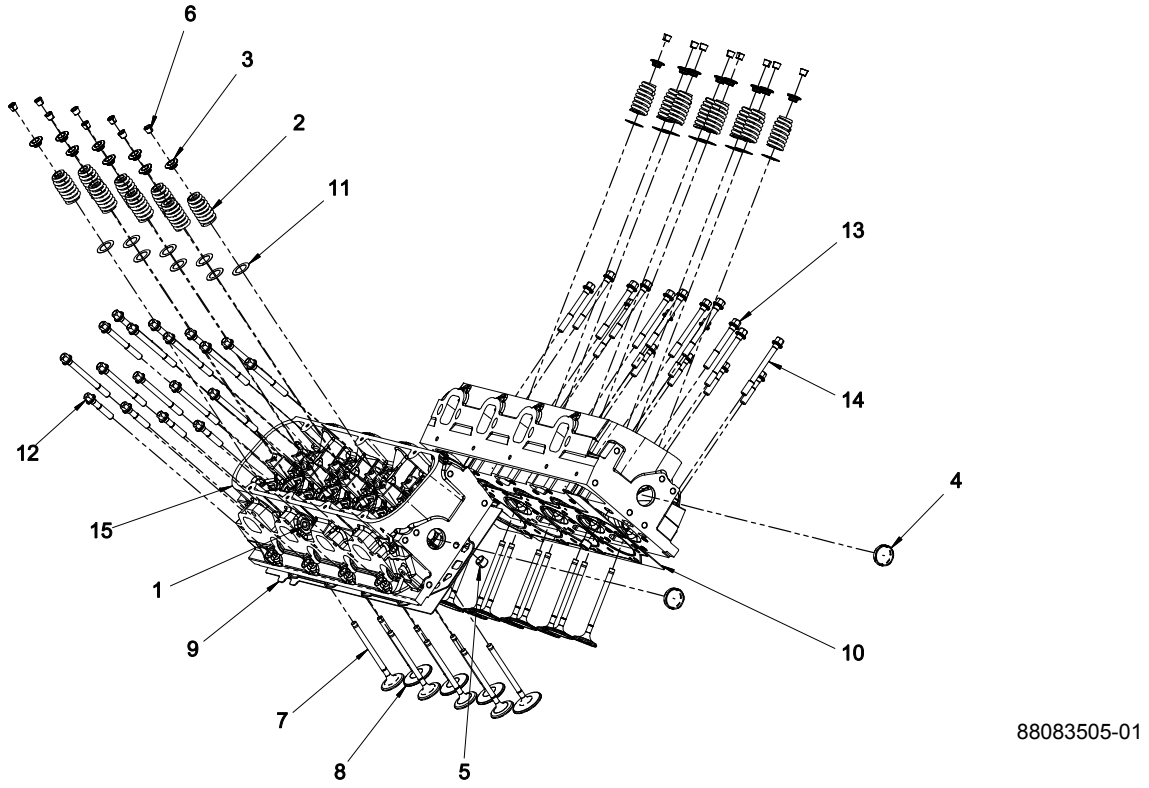

POS.	PART NUMBER	DESCRIPTION	QTY	NOTES
1	80000307	PLUG	2	
2	80000041	VALVE SPRING	16	
3	80000042	RETAINER	16	
4	80000048	CORE PLUG	2	
5	80000049	DOWEL	4	
6	80000122	KEY	16	
7	80000123	EXHAUST VALVE	8	
8	80000124	INTAKE VALVE	8	
9	80000141	GASKET	1	
10	80000142	GASKET	1	
11	80000159	SHIM	16	
12	80000188	BOLT	8	
13	80000189	BOLT	4	
14	80000190	BOLT	24	
15	88900012	CYLINDER HEAD	2	

Power Solutions International
201 Mittel Dr., Wood Dale, IL 60191 | Te. +10 630 350 9400 | Fax. +1 630 350 9588
Web: www.psiengines.com | email: parts@psiengines.com

VALVE ACTUATION

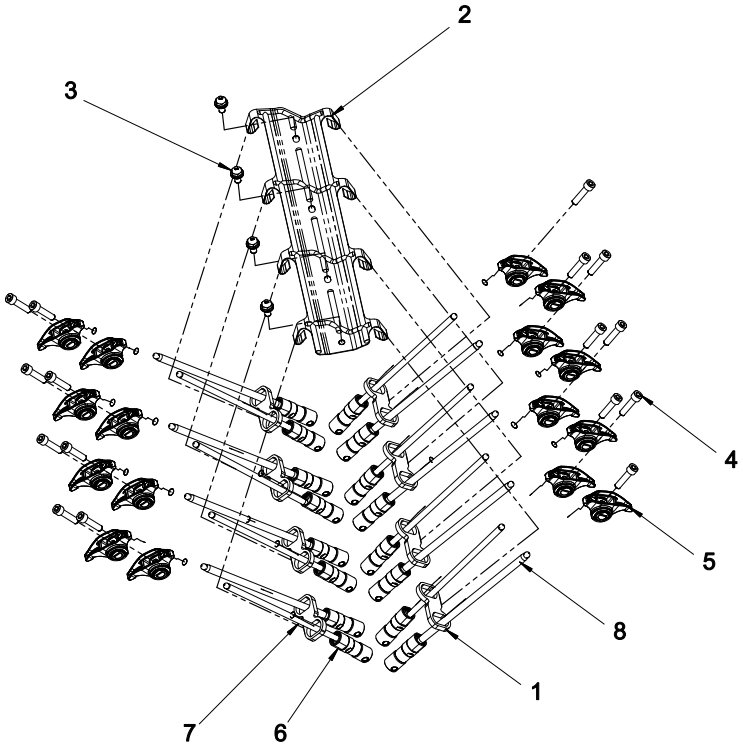

88084000-03

POS.	PART NUMBER	DESCRIPTION	QTY	NOTES
1	80000053	LIFTER GUIDE	8	
2	80000054	LIFTER TRAY	1	
3	80000055	BOLT	4	
4	80000058	BOLT	16	
5	80000807	VALVE ROCKER	16	
6	80000145	VALVE LIFTER	16	
7	80000853	INTAKE VALVE ROD	8	
8	80000854	EXHAUST VALVE ROD	8	

Power Solutions International
201 Mittel Dr., Wood Dale, IL 60191 | Te. +10 630 350 9400 | Fax. +1 630 350 9588
Web: www.psiengines.com | email: parts@psiengines.com

ENGINE COVER

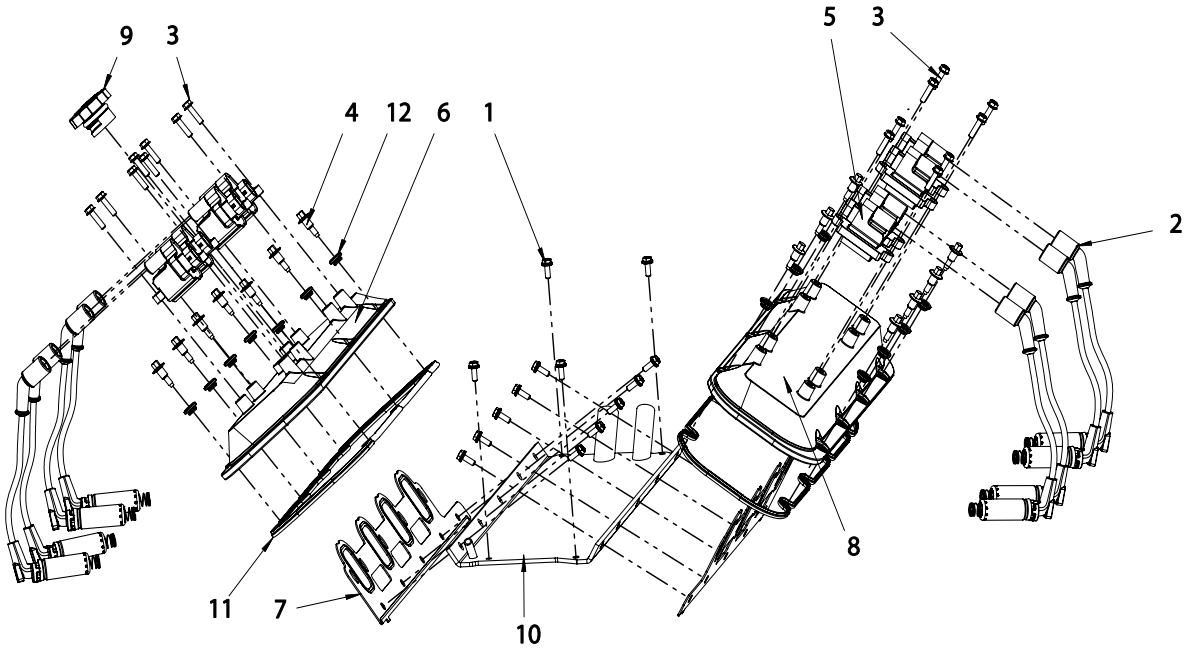

88085001-07

POS.	PART NUMBER	DESCRIPTION	QTY	NOTES
1	80000063	BOLT	14	
2	80000064	SPARK PLUG WIRE	8	
3	80000065	BOLT	16	
4	80000069	BOLT	14	
5	80000070	IGNITION COIL	8	
6	80000770	COVER	1	
7	80000082	GASKET	2	
8	80000108	VALVE COVER	1	
9	80000281	OIL CAP	1	
10	80000608	VALLEY COVER	1	
11	80000540	GASKET	2	
12	80000541	GROMMET	14	

Power Solutions International
201 Mittel Dr., Wood Dale, IL 60191 | Te. +10 630 350 9400 | Fax. +1 630 350 9588
Web: www.psiengines.com | email: parts@psiengines.com

WATER PUMP

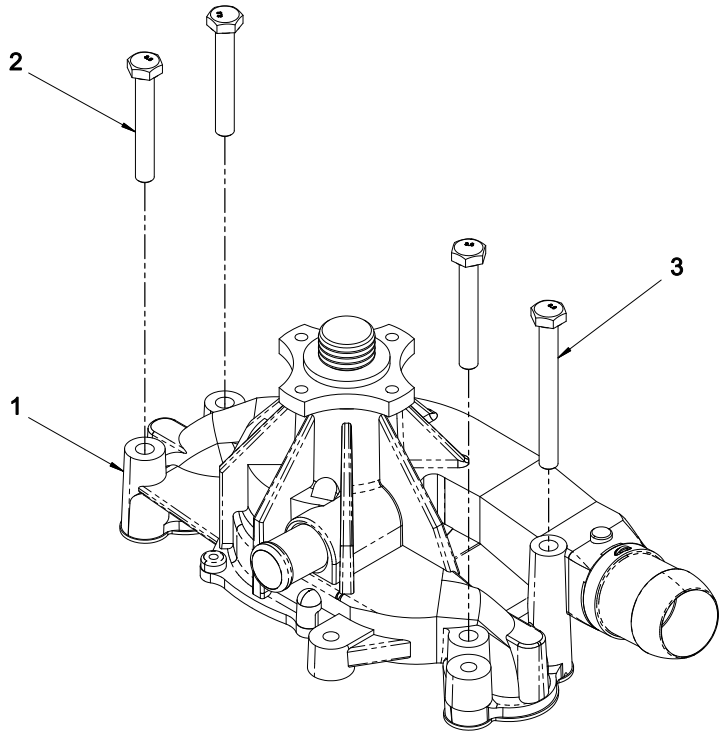

88085500-03

POS.	PART NUMBER	DESCRIPTION	QTY	NOTES
1	80000072	WATER PUMP WITH GASKET	1	
2	80000074	FASTENER	3	
3	80000157	BOLT	1	

Power Solutions International
201 Mittel Dr., Wood Dale, IL 60191 | Te. +10 630 350 9400 | Fax. +1 630 350 9588
Web: www.psiengines.com | email: parts@psiengines.com

COOLANT CROSSOVER

NO IMAGE AVAILABLE

38080659-01

POS.	PART NUMBER	DESCRIPTION	QTY	NOTES
1	32001112	CLAMP	1	
2	32501950	CLAMP	1	
3	80000063	BOLT	1	
4	80000079	PIPE FASTENER	3	
5	80000307	PLUG	1	
6	80000652	GASKET	2	
7	80000773	CROSSOVER PIPE	1	
8	80000788	BYPASS HOSE	1	
9	80000789	FITTING	1	
10	80000822	STUD	1	

Power Solutions International
201 Mittel Dr., Wood Dale, IL 60191 | Te. +10 630 350 9400 | Fax. +1 630 350 9588
Web: www.psiengines.com | email: parts@psiengines.com

INTAKE MANIFOLD

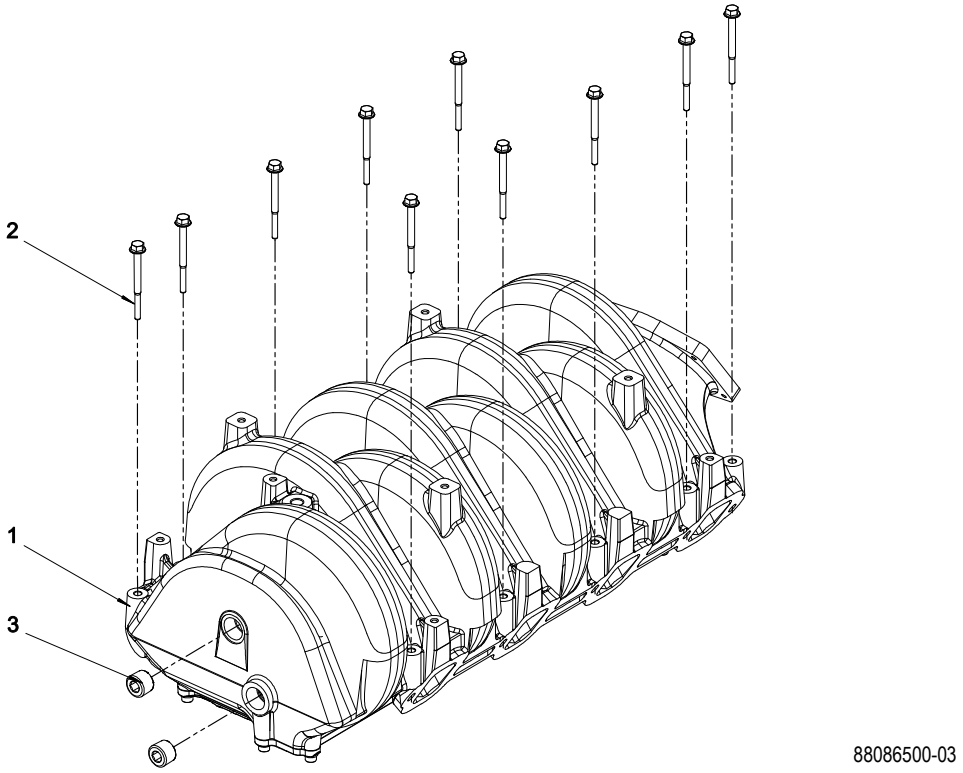

POS.	PART NUMBER	DESCRIPTION	QTY	NOTES
1	80000790	INTAKE MANIFOLD	1	
2	80000351	BOLT	10	
3	80000307	PLUG	2	
4	80000352	WASHER	10	NOT SHOWN

Power Solutions International
201 Mittel Dr., Wood Dale, IL 60191 | Te. +10 630 350 9400 | Fax. +1 630 350 9588
Web: www.psiengines.com | email: parts@psiengines.com

FLYWHEEL

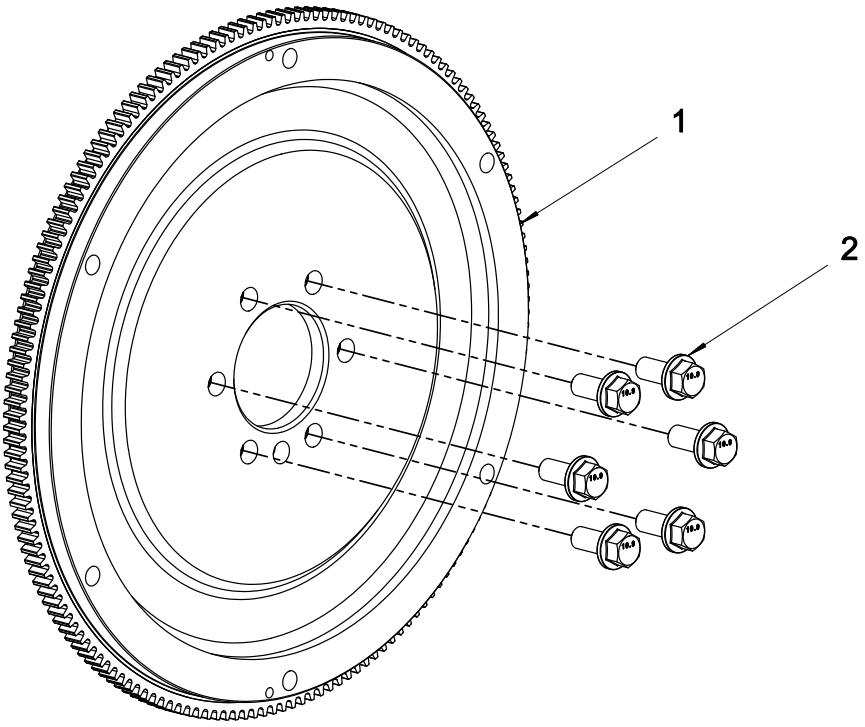

88087500-01

POS.	PART NUMBER	DESCRIPTION	QTY	NOTES
1	30600017	FLYWHEEL	1	
2	80000099	BOLT	6	

Power Solutions International
201 Mittel Dr., Wood Dale, IL 60191 | Te. +10 630 350 9400 | Fax. +1 630 350 9588
Web: www.psiengines.com | email: parts@psiengines.com

SENSORS AND SPARK PLUGS

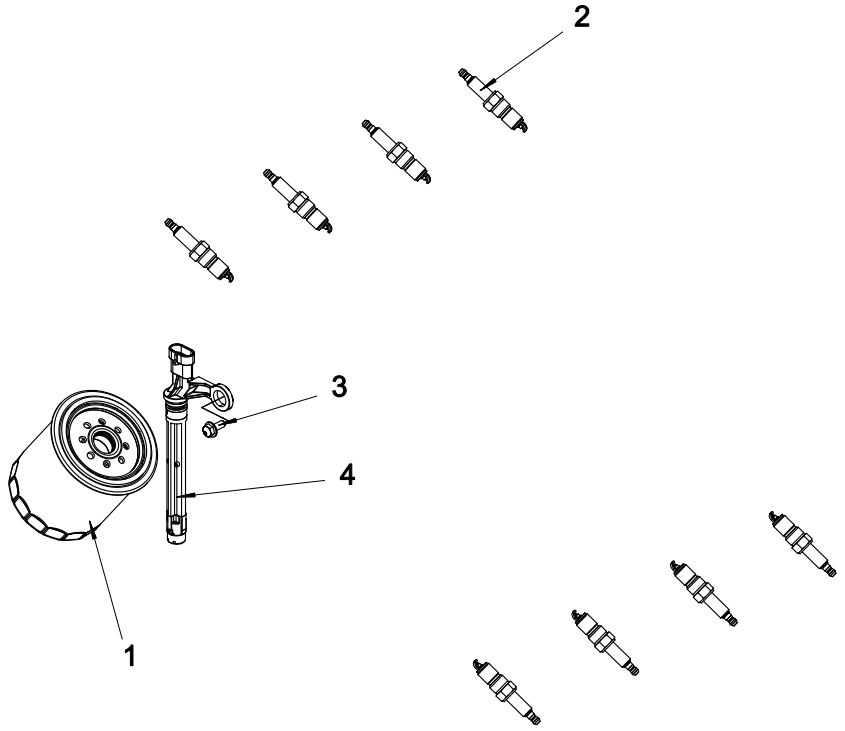

88087000-06

POS.	PART NUMBER	DESCRIPTION	QTY	NOTES
1	30100345	OIL FILTER	1	
2	80000311	SPARK PLUG	8	
3	80000312	BOLT	1	
4	80000103	CRANK SENSOR	1	

Power Solutions International
201 Mittel Dr., Wood Dale, IL 60191 | Te. +10 630 350 9400 | Fax. +1 630 350 9588
Web: www.psiengines.com | email: parts@psiengines.com

CYLINDER BLOCK

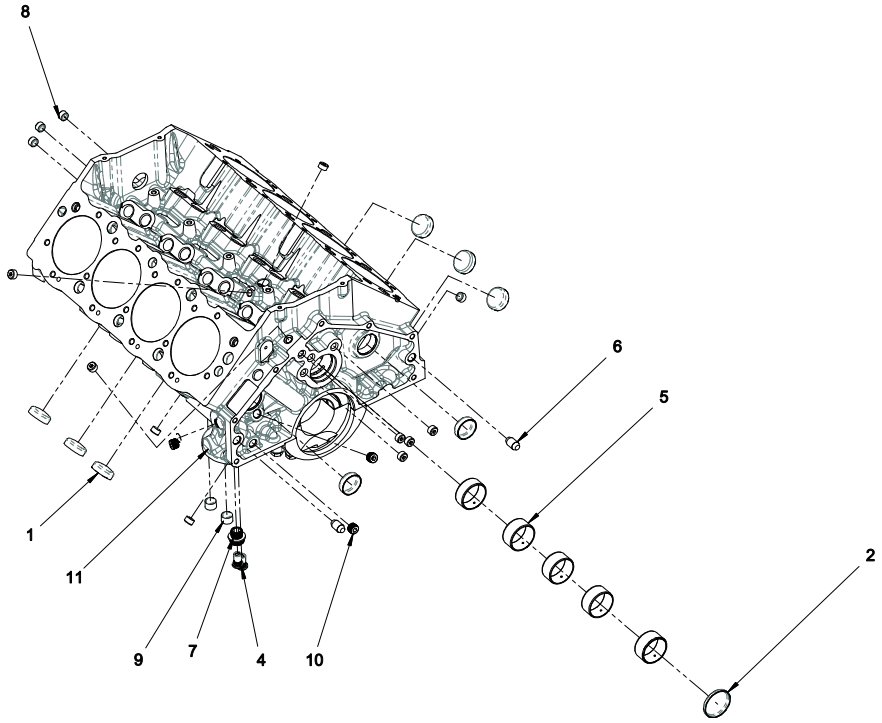

89200001-01

POS.	PART NUMBER	DESCRIPTION	QTY	NOTES
1	80000005	CORE PLUG	8	
2	80000006	CAM PLUG	1	
3	80000007	OIL PLUG	13	
4	80000012	CHECK VALVE	2	
5	80000083	BEARING SET	1	
6	80000093	DOWEL	2	
7	80000094	FILTER ADAPTER	1	
8	80000007	OIL PLUG	1	
9	80000307	STEEL PLUG	2	
10	80000313	STEEL PLUG	3	
11	88900016	CRANKCASE	1	
12	80000170	ORIFICE	1	NOT SHOWN
13	80000185	JET	8	NOT SHOWN

Power Solutions International
201 Mittel Dr., Wood Dale, IL 60191 | Te. +10 630 350 9400 | Fax. +1 630 350 9588
Web: www.psiengines.com | email: parts@psiengines.com

CRANKSHAFT

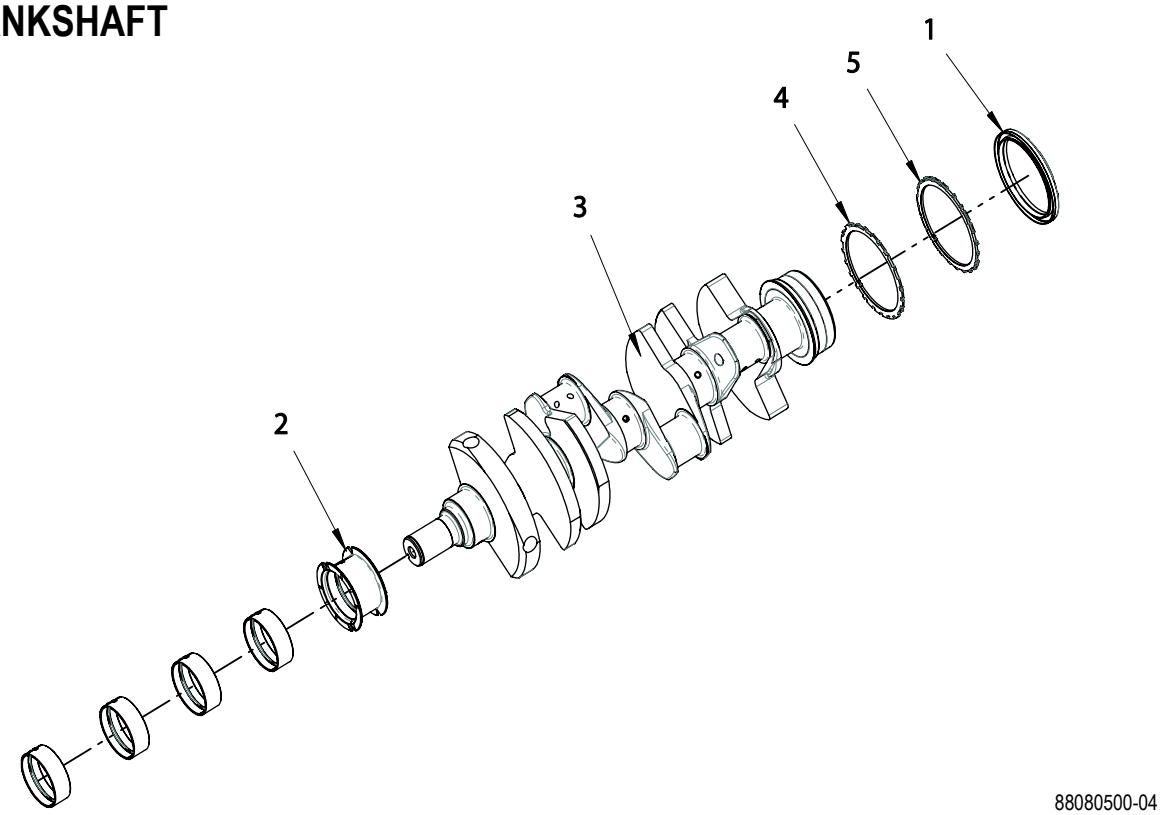

POS.	PART NUMBER	DESCRIPTION	QTY	NOTES
1	80000014	CRANK SEAL	1	
2	88900017	MAIN BEARING	1	
3	80000778	CRANKSHAFT	1	
4	80000013	RING	1	
5	80000068	RING	1	
6	80000045	BEARING SET	1	NOT SHOWN

Power Solutions International
201 Mittel Dr., Wood Dale, IL 60191 | Te. +10 630 350 9400 | Fax. +1 630 350 9588
Web: www.psiengines.com | email: parts@psiengines.com

CAMSHAFT

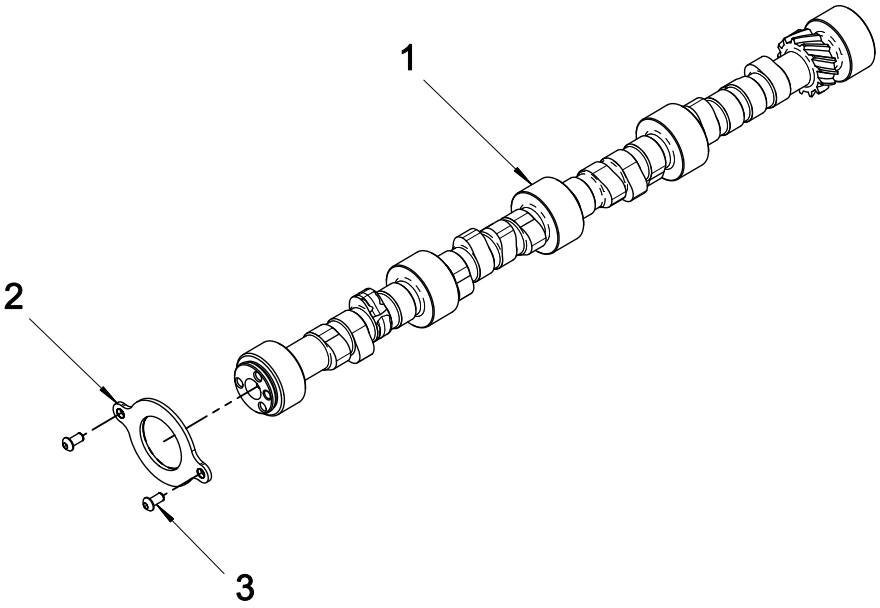

88081000-02

POS.	PART NUMBER	DESCRIPTION	QTY	NOTES
1	80000015	CAMSHAFT	1	
2	80000016	RETAINER	1	
3	80000017	FASTENER	2	

Power Solutions International
201 Mittel Dr., Wood Dale, IL 60191 | Te. +10 630 350 9400 | Fax. +1 630 350 9588
Web: www.psiengines.com | email: parts@psiengines.com

PISTON AND ROD

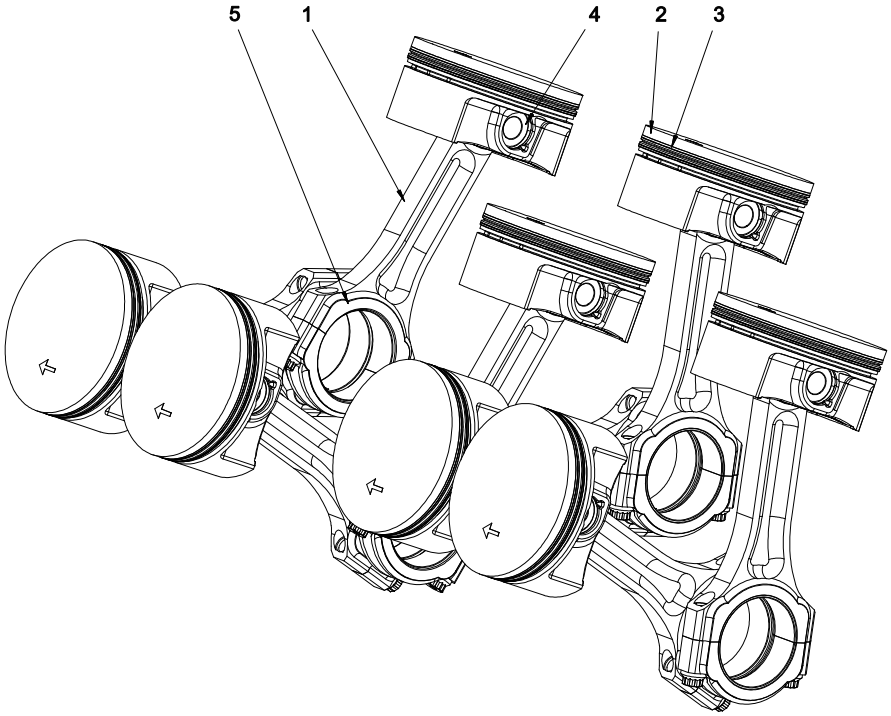

88081502-02

POS.	PART NUMBER	DESCRIPTION	QTY	NOTES
1	80000004	ROD ASSEMBLY	8	
2	80000154	PISTON	8	
3	80000155	RING SET	1	
4	80000156	PIN	8	
5	80000174	ROD BEARING	8	
6	80000783	COMPRESSION RING	8	NOT SHOWN
7	80000784	COMPRESSION RING	8	NOT SHOWN
8	80000785	RAIL	16	NOT SHOWN
9	80000786	EXPANDER	8	NOT SHOWN

Power Solutions International
201 Mittel Dr., Wood Dale, IL 60191 | Te. +10 630 350 9400 | Fax. +1 630 350 9588
Web: www.psiengines.com | email: parts@psiengines.com

OIL PUMP

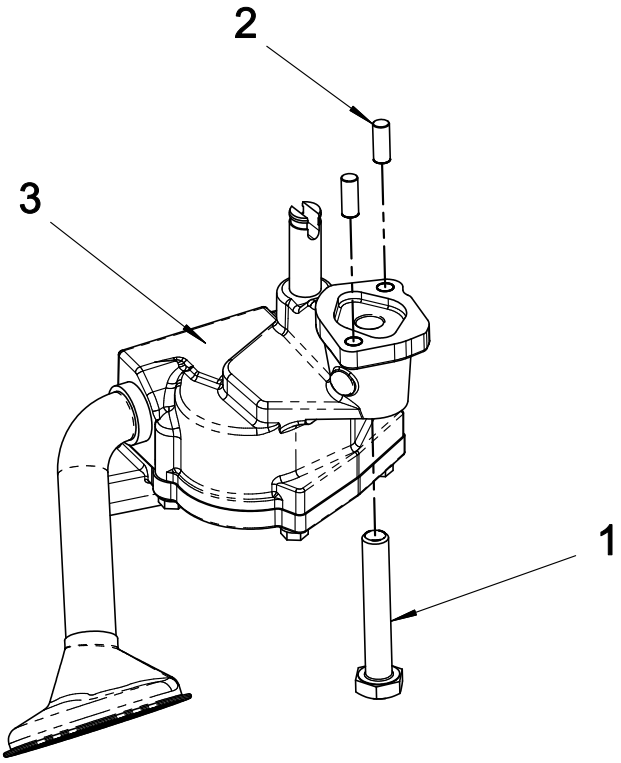

88082000-02

POS.	PART NUMBER	DESCRIPTION	QTY	NOTES
1	80000021	BOLT	1	
2	80000105	DOWEL PIN	2	
3	80000150	TUBE	1	

Power Solutions International
201 Mittel Dr., Wood Dale, IL 60191 | Te. +10 630 350 9400 | Fax. +1 630 350 9588
Web: www.psiengines.com | email: parts@psiengines.com

OIL PUMP DRIVE

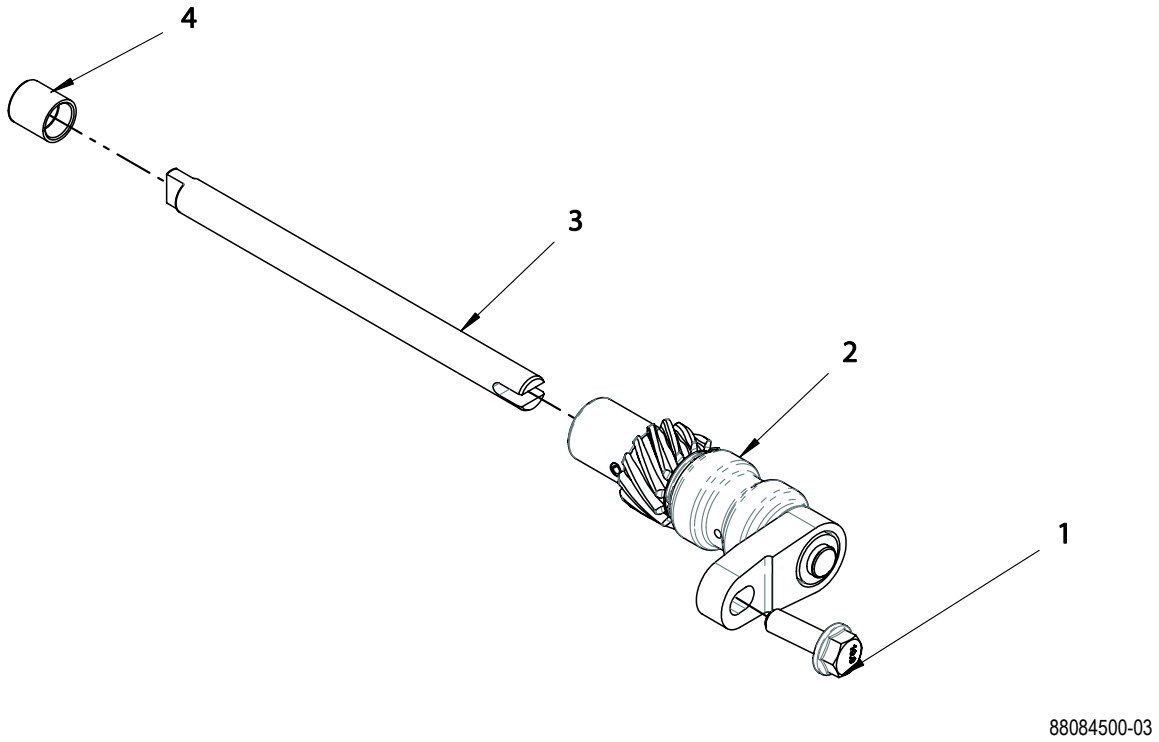

POS.	PART NUMBER	DESCRIPTION	QTY	NOTES
1	80000022	BOLT	1	
2	80000060	PUMP DRIVE	1	
3	80000850	SHAFT	1	
4	80000851	RETAINER	1	

Power Solutions International
201 Mittel Dr., Wood Dale, IL 60191 | Te. +10 630 350 9400 | Fax. +1 630 350 9588
Web: www.psiengines.com | email: parts@psiengines.com

CRANKSHAFT BALANCER

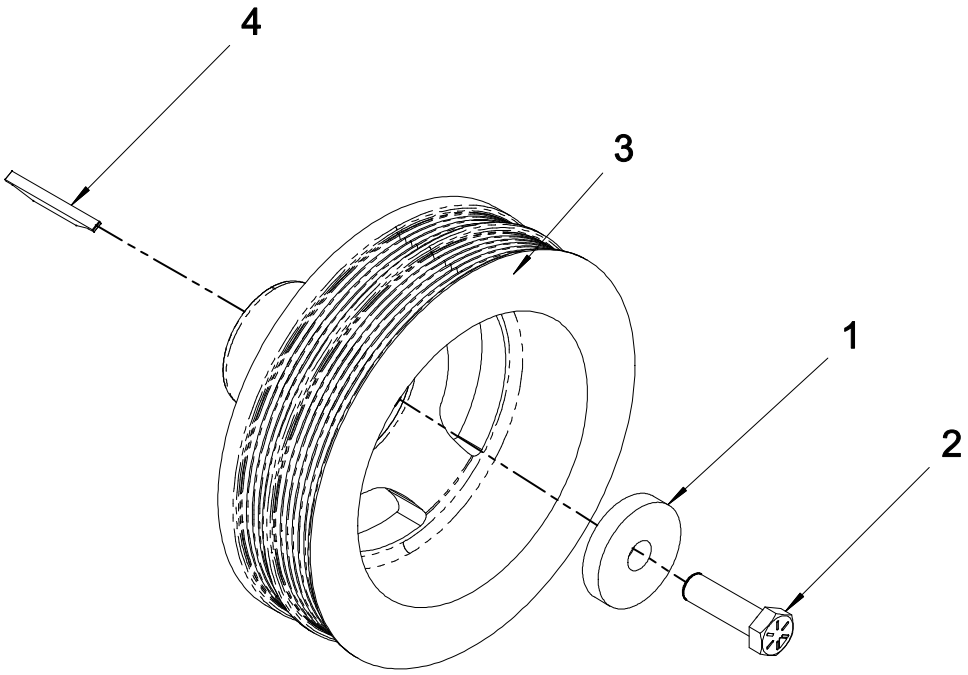

88082501-03

POS.	PART NUMBER	DESCRIPTION	QTY	NOTES
1	80000028	WASHER	1	
2	80000029	BOLT	1	
3	80000165	BALANCER	1	
4	80000191	KEY	1	

Power Solutions International
201 Mittel Dr., Wood Dale, IL 60191 | Te. +10 630 350 9400 | Fax. +1 630 350 9588
Web: www.psiengines.com | email: parts@psiengines.com

FRONT COVER

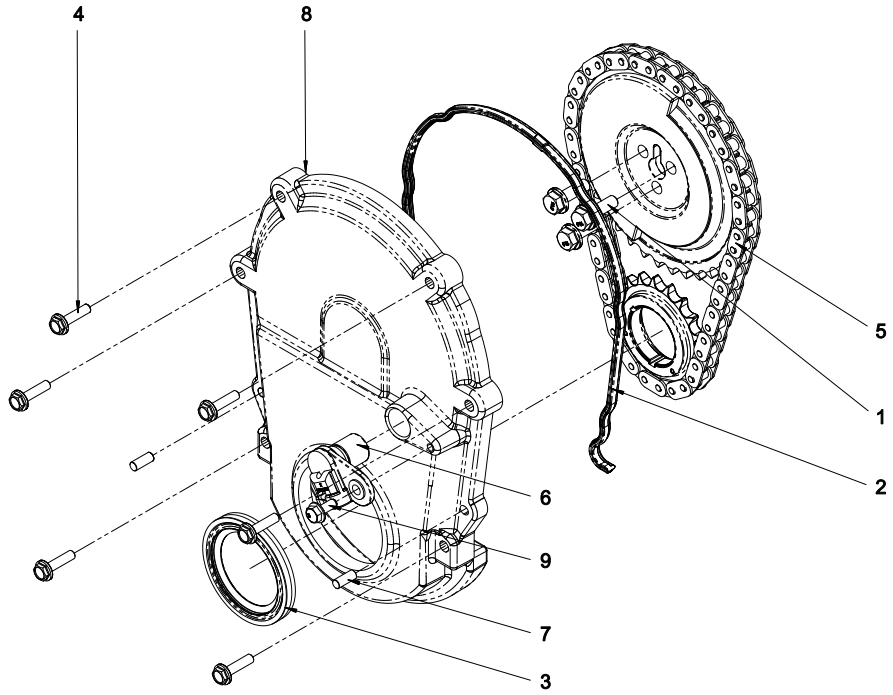

88082502-10

POS.	PART NUMBER	DESCRIPTION	QTY	NOTES
1	80000022	BOLT	3	
2	80000024	GASKET	1	
3	80000025	SEAL	1	
4	80000065	BOLT	6	
5	80000084	TIMING SET	1	
6	80000097	CAMSHAFT SENSOR	1	
7	80000105	DOWEL PIN	2	
8	80000106	FRONT COVER	1	
9	80000312	BOLT	1	

Power Solutions International
201 Mittel Dr., Wood Dale, IL 60191 | Te. +10 630 350 9400 | Fax. +1 630 350 9588
Web: www.psiengines.com | email: parts@psiengines.com

OIL PAN

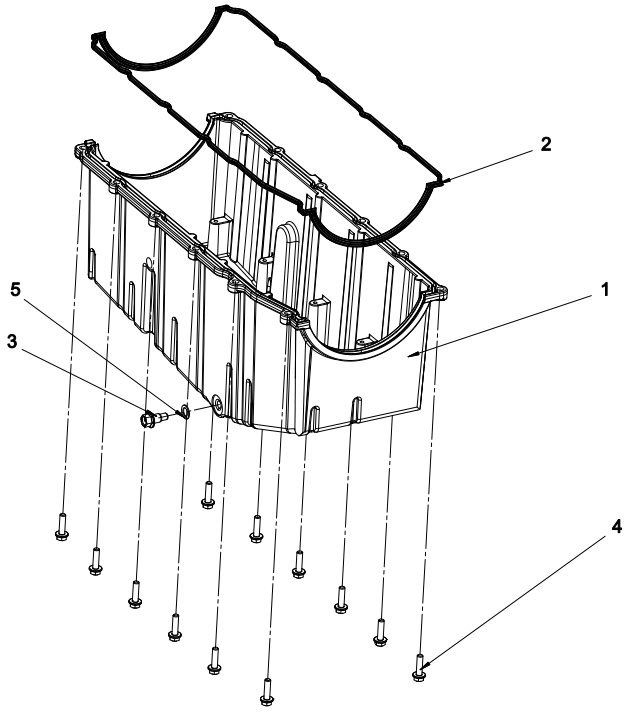

88083002-07

POS.	PART NUMBER	DESCRIPTION	QTY	NOTES
1	80000107	OIL PAN	1	
2	80000032	SEAL	1	
3	80000034	PLUG	2	
4	80000037	BOLT	12	
5	80000143	COPPER SEAL	2	

Power Solutions International
201 Mittel Dr., Wood Dale, IL 60191 | Te. +10 630 350 9400 | Fax. +1 630 350 9588
Web: www.psiengines.com | email: parts@psiengines.com

DIPSTICK AND TUBE

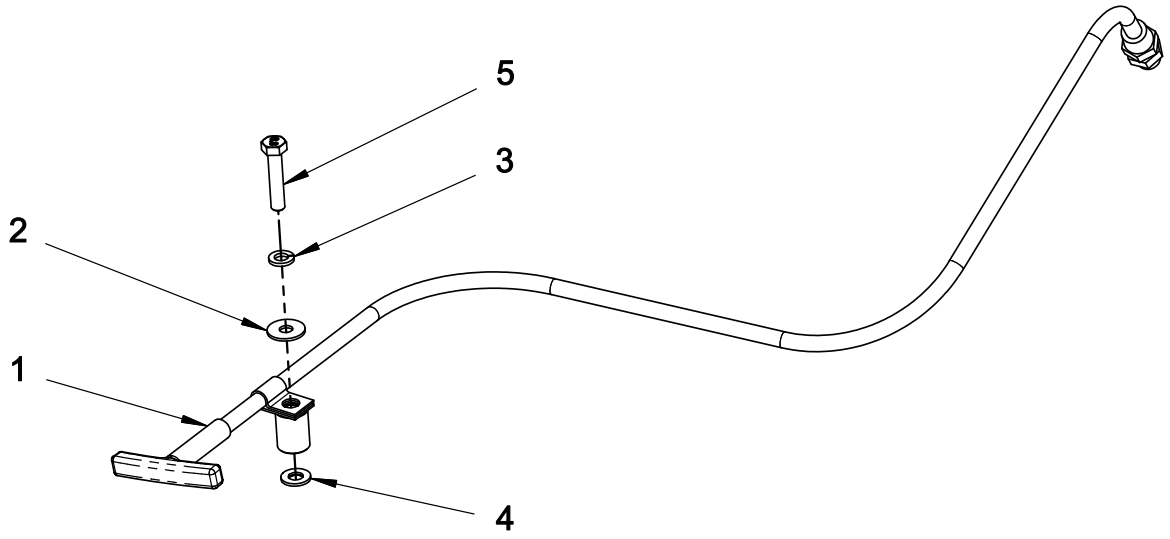

38010914-03

POS.	PART NUMBER	DESCRIPTION	QTY	NOTES
1	32501059	DIPSTICK AND TUBE ASSEMBLY	1	
2	35000023	WASHER	1	
3	35000024	WASHER	1	
4	35000028	WASHER	1	
5	35000189	BOLT	1	

Power Solutions International
201 Mittel Dr., Wood Dale, IL 60191 | Te. +10 630 350 9400 | Fax. +1 630 350 9588
Web: www.psiengines.com | email: parts@psiengines.com

STARTER

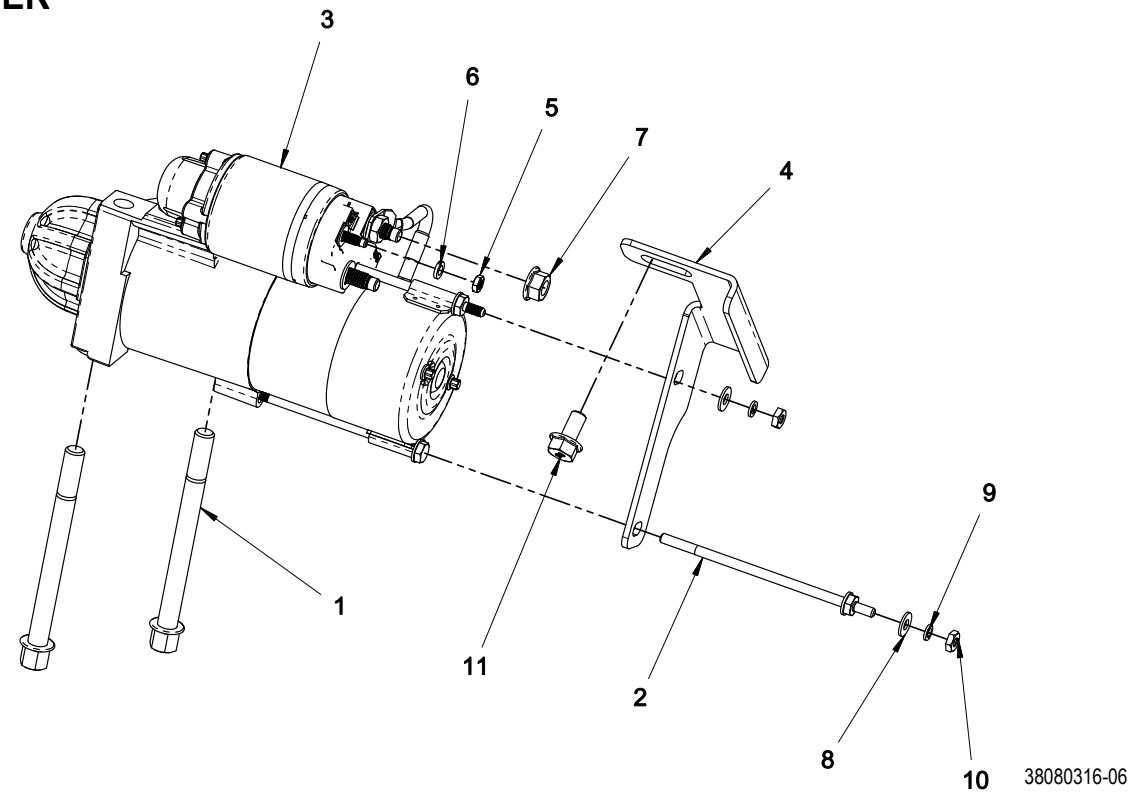

POS.	PART NUMBER	DESCRIPTION	QTY	NOTES
1	33000272	BOLT	2	
2	33000939	BOLT	1	
3	33001516	STARTER	1	
4	33001573	BRACKET	1	
5	35000001	NUT	1	
6	35000002	WASHER	1	
7	35000021	NUT	1	
8	35000110	WASHER	2	
9	35000111	WASHER	2	
10	35000238	NUT	2	
11	35000526	BOLT	1	

Power Solutions International
201 Mittel Dr., Wood Dale, IL 60191 | Te. +10 630 350 9400 | Fax. +1 630 350 9588
Web: www.psiengines.com | email: parts@psiengines.com

ALTERNATOR

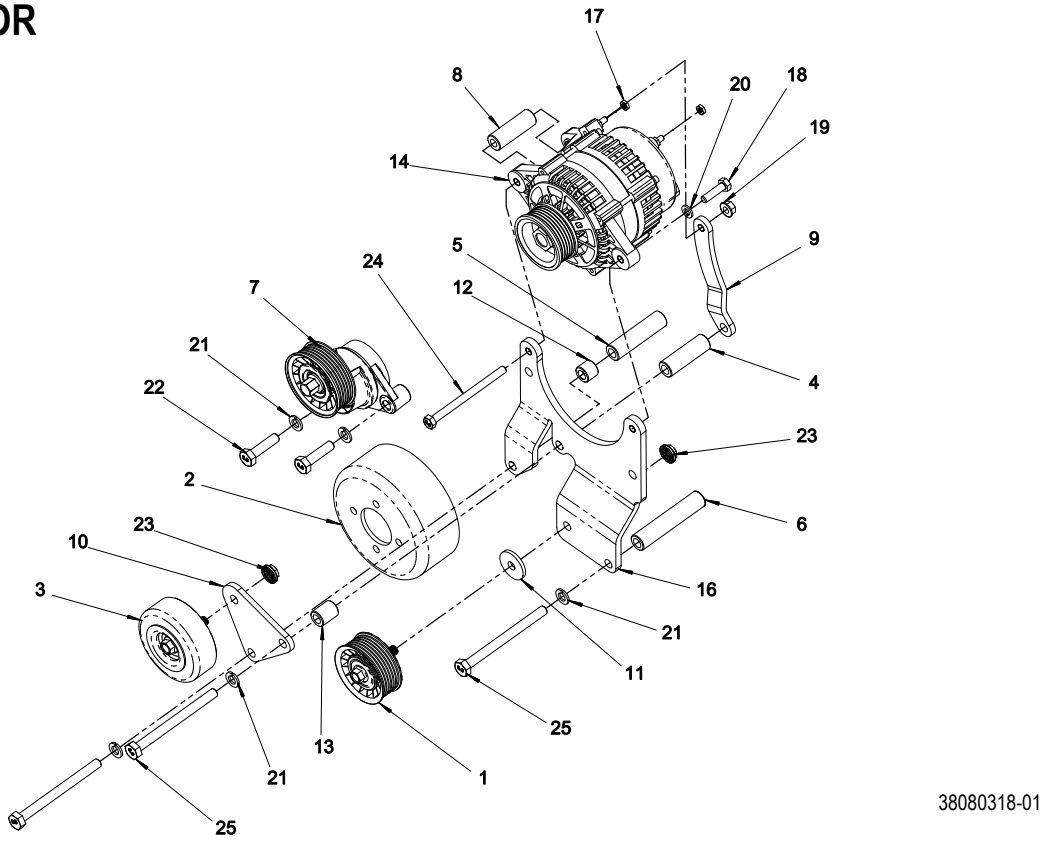

POS.	PART NUMBER	DESCRIPTION	QTY	NOTES
1	30100042	IDLER PULLEY	1	
2	32001044	WATER PUMP PULLEY	1	
3	33000105	IDLER PULLEY	1	
4	33000116	SPACER	1	
5	33000117	SPACER	1	
6	33000118	SPACER	1	
7	33000121	TENSIONER PULLEY	1	
8	33000124	SPACER	1	
9	33000131	BRACE	1	
10	33000164	PLATE	1	

Power Solutions International
201 Mittel Dr., Wood Dale, IL 60191 | Te. +10 630 350 9400 | Fax. +1 630 350 9588
Web: www.psiengines.com | email: parts@psiengines.com

ALTERNATOR CONT.

POS.	PART NUMBER	DESCRIPTION	QTY	NOTES
11	33000165	WASHER	1	
12	33000166	SPACER	1	
13	33000167	SPACER	1	
14	33001243	ALTERNATOR	1	
15	33001317	BELT	1	NOT SHOWN
16	33001318	BRACKET	1	
17	35000003	NUT	2	
18	35000019	BOLT	1	
19	35000021	NUT	1	
20	35000024	WASHER	1	
21	35000046	WASHER	5	
22	35000151	BOLT	2	
23	35000196	NUT	2	
24	35000271	BOLT	1	
25	35000278	BOLT	3	

Power Solutions International
201 Mittel Dr., Wood Dale, IL 60191 | Te. +10 630 350 9400 | Fax. +1 630 350 9588
Web: www.psiengines.com | email: parts@psiengines.com

THROTTLE BODY

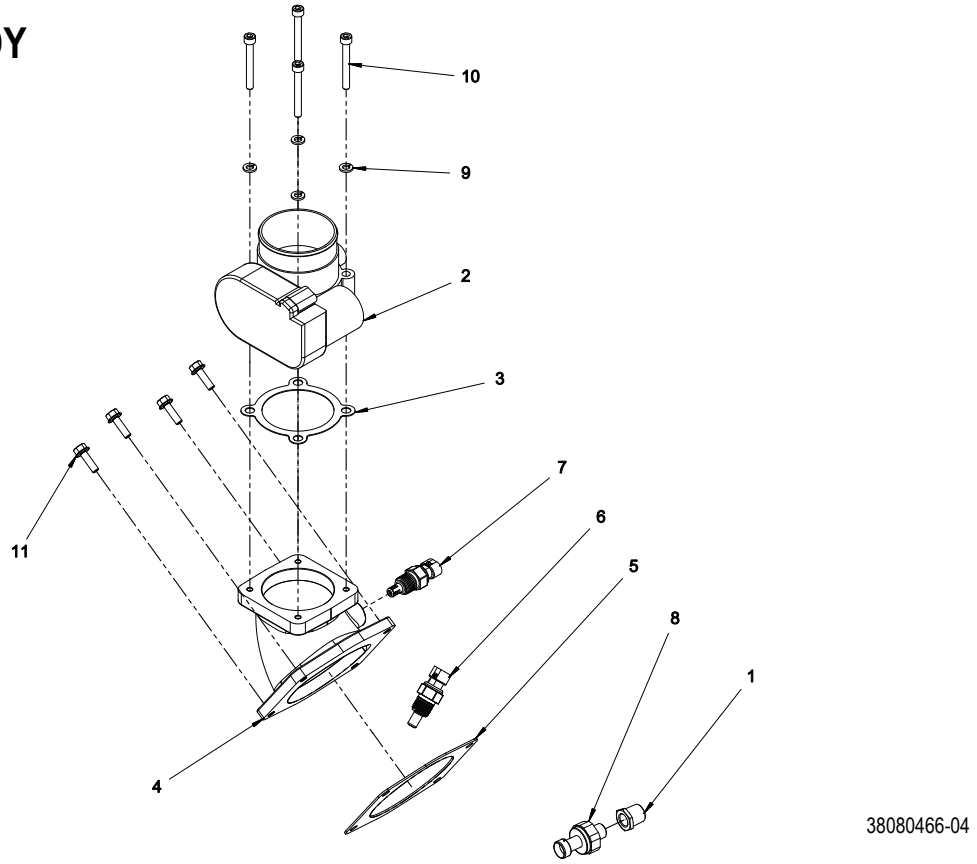

POS.	PART NUMBER	DESCRIPTION	QTY	NOTES
1	32500115	BUSHING	1	
2	32500662	THROTTLE BODY	1	
3	32500715	GASKET	1	
4	32502123	ADAPTER	1	
5	32502127	GASKET	1	
6	33000376	COOLANT SENSOR	1	
7	33000377	INLET AIR SENSOR	1	
8	33001415	OIL PRESSURE SENSOR	1	
9	35000285	WASHER	4	
10	35000335	BOLT	4	
11	35000696	BOLT	4	

Power Solutions International
201 Mittel Dr., Wood Dale, IL 60191 | Te. +10 630 350 9400 | Fax. +1 630 350 9588
Web: www.psiengines.com | email: parts@psiengines.com

TURBOCHARGER

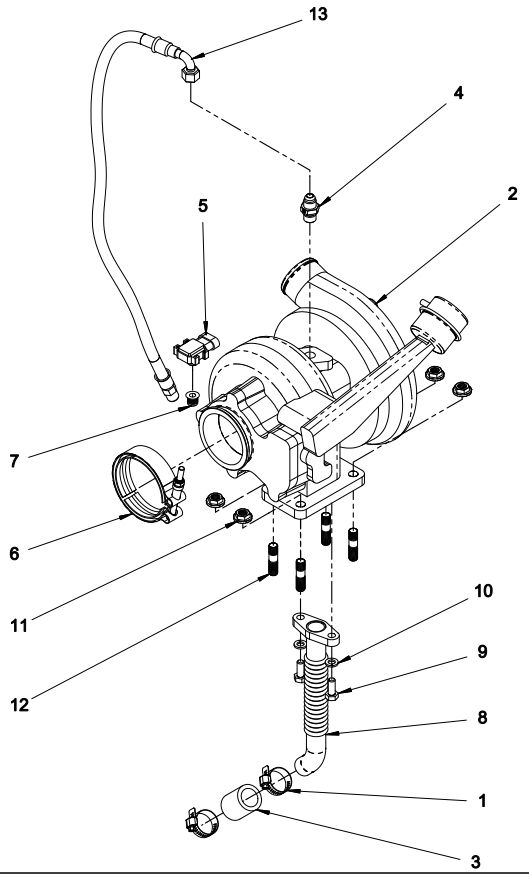

380804688-11

POS.	PART NUMBER	DESCRIPTION	QTY	NOTES
1	32500318	CLAMP	2	
2	32500591	TURBOCHARGER	1	
3	32500595	OIL DRAIN HOSE	2 IN	
4	32500597	FITTING	1	
5	32500600	MAP SENSOR	1	
6	33500283	CLAMP	1	
7	33500289	SEAL	1	
8	33501002	TUBE	1	
9	35000018	BOLT	2	
10	35000024	WASHER	2	
11	35000196	NUT	4	
12	35000302	STUD	4	
13	52500043	TEFLON HOSE	1	

Power Solutions International
201 Mittel Dr., Wood Dale, IL 60191 | Te. +10 630 350 9400 | Fax. +1 630 350 9588
Web: www.psiengines.com | email: parts@psiengines.com

FUEL

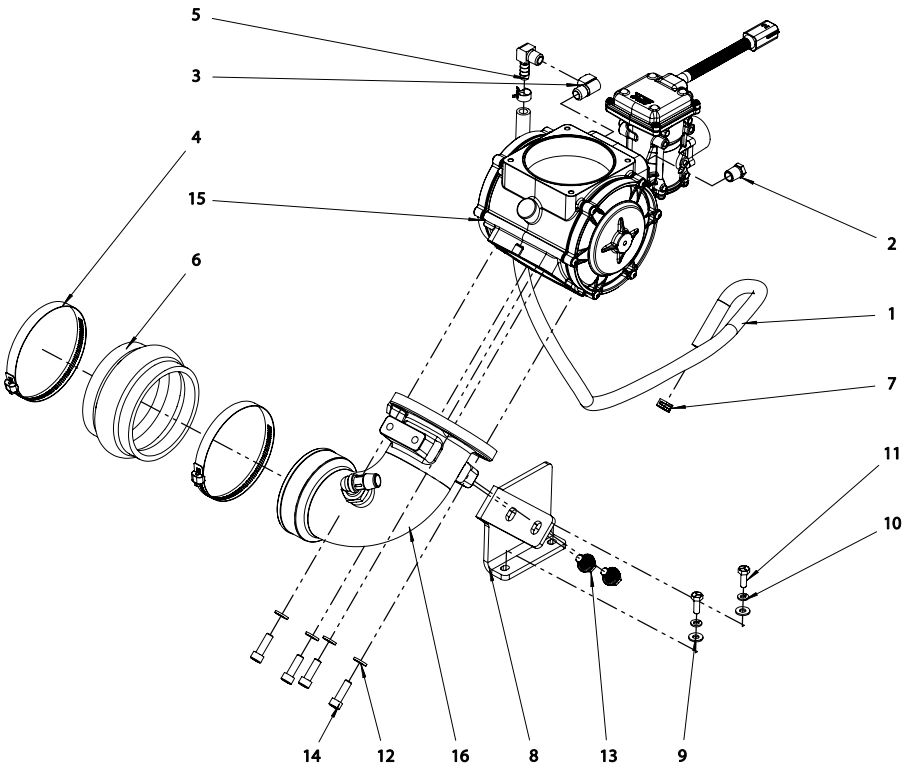

38080469-02

POS.	PART NUMBER	DESCRIPTION	QTY	NOTES
1	32500135	HOSE	35 IN	
2	32500233	PLUG	1	
3	32500235	ELBOW	1	
4	32500622	CLAMP	2	
5	32500659	FITTING	1	
6	32500875	HOSE	1	
7	32501134	CLAMP	2	
8	32501969	BRACKET	1	
9	35000006	WASHER	2	
10	35000007	WASHER	2	
11	35000010	BOLT	2	
12	35000361	WASHER	4	
13	35000544	BOLT	2	
14	35000625	BOLT	4	
15	38080463	EPR KIT	1	
16	38080857	TURBO KIT	1	

Power Solutions International
201 Mittel Dr., Wood Dale, IL 60191 | Te. +10 630 350 9400 | Fax. +1 630 350 9588
Web: www.psiengines.com | email: parts@psiengines.com

EPR AND MIXER

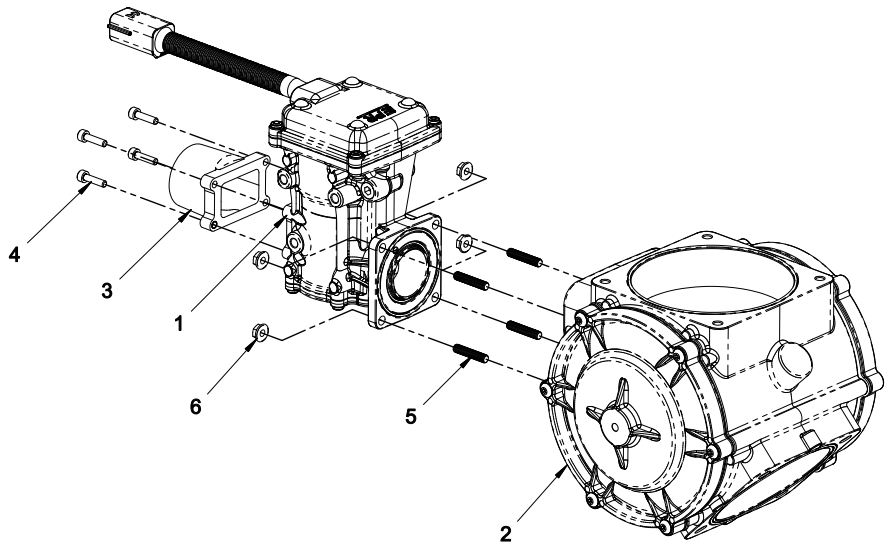

38080463-01

POS.	PART NUMBER	DESCRIPTION	QTY	NOTES
1	32501671	EPR	1	
2	32501690	MIXER *	1	SEE BELOW
3	32501779	ADAPTER	1	
4	35000674	BOLT	4	
5	35000680	STUD	4	
6	35000681	NUT	4	
*	106823	MIXER REPAIR KIT	1	

Power Solutions International
201 Mittel Dr., Wood Dale, IL 60191 | Te. +10 630 350 9400 | Fax. +1 630 350 9588
Web: www.psiengines.com | email: parts@psiengines.com

TURBO INLET

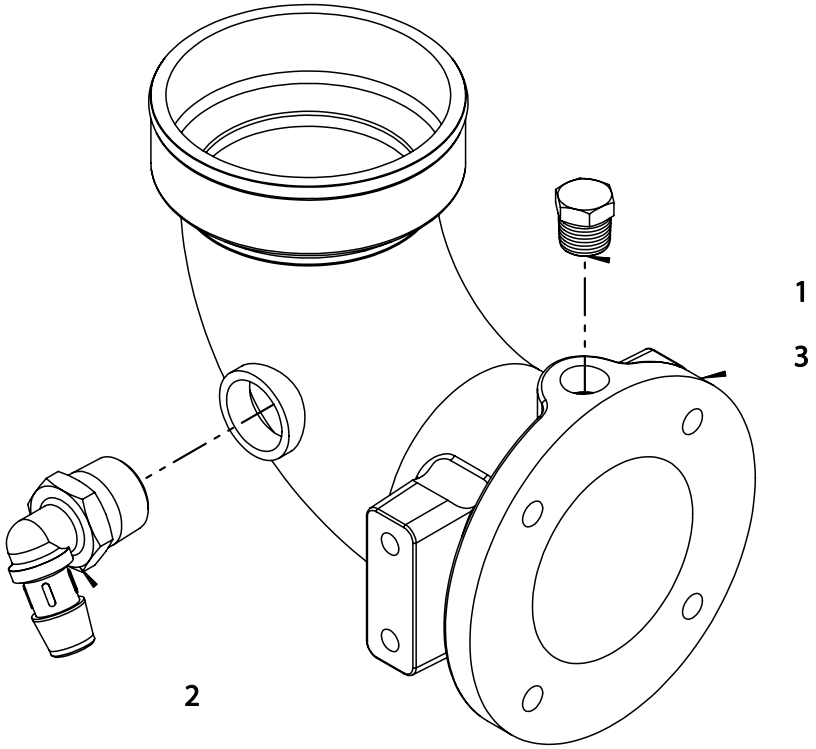

38080857-01

POS.	PART NUMBER	DESCRIPTION	QTY	NOTES
1	32500342	PLUG	1	
2	32502551	FITTING	1	
3	38901319	ELBOW	1	

Power Solutions International
201 Mittel Dr., Wood Dale, IL 60191 | Te. +10 630 350 9400 | Fax. +1 630 350 9588
Web: www.psiengines.com | email: parts@psiengines.com

BREATHER

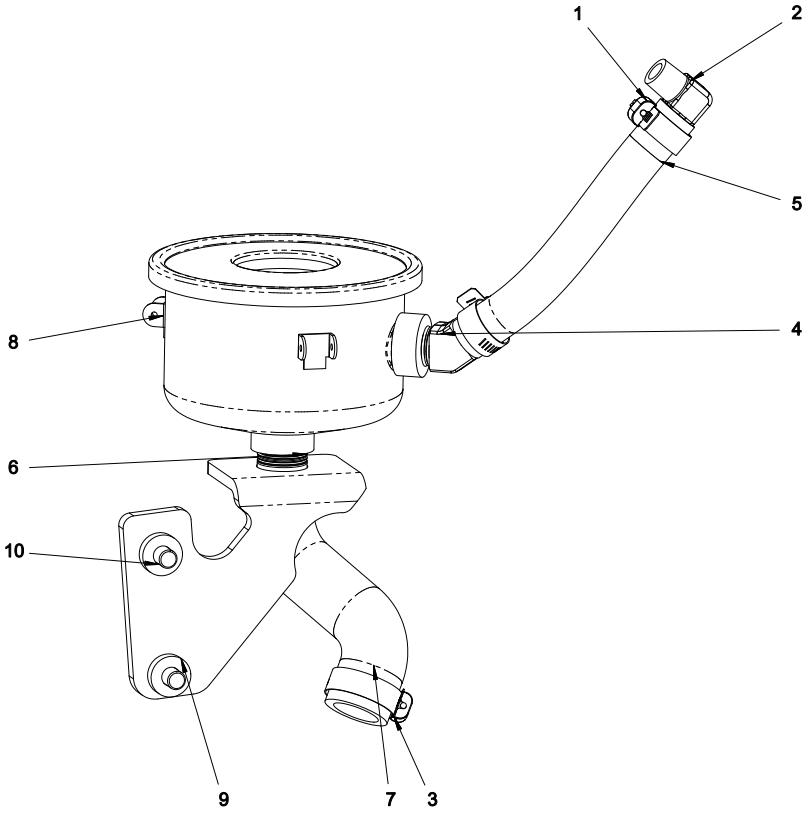

38080708-05

POS.	PART NUMBER	DESCRIPTION	QTY	NOTES
1	32000148	CLAMP	2	
2	32500555	CLAMP	2	
3	32501647	HOSE	14 IN	
4	32502452	INSULATION	17 IN	
5	32502550	FITTING	1	
6	33001562	ZIP TIE	4	
7	33500843	BRACKET	1	
8	33500844	HOSE	1	
9	33500852	SEPERATOR	1	
10	33501085	INSULATION	7 IN	
11	35000191	WASHER	2	
12	35000368	BOLT	2	
13	53500047	COVER	1	

Power Solutions International
201 Mittel Dr., Wood Dale, IL 60191 | Te. +10 630 350 9400 | Fax. +1 630 350 9588
Web: www.psiengines.com | email: parts@psiengines.com

WIRING

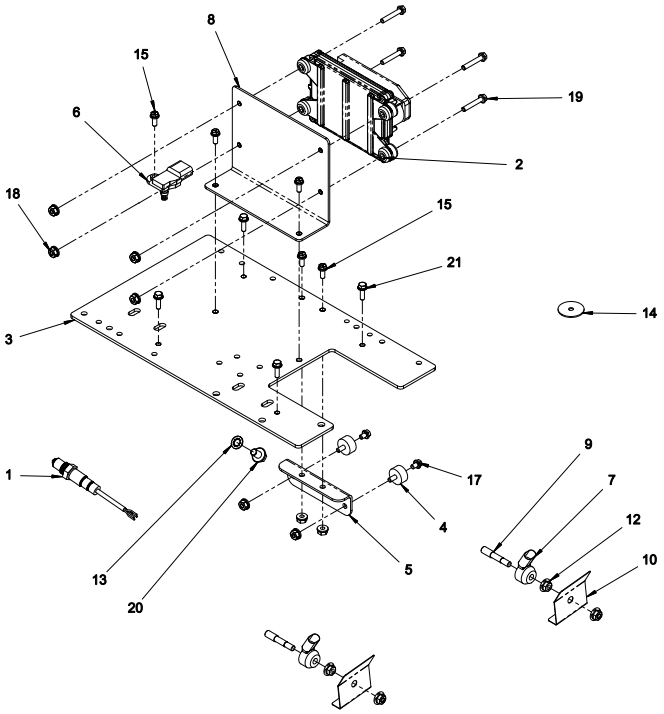

38081225-05

POS.	PART NUMBER	DESCRIPTION	QTY	NOTES
1	32501267	O2 SENSOR	1	
2	38901156	PROGRAMMED ECU	1	
3	32502118	PLATE	1	
4	33000354	ISOLATOR	2	
5	33000355	BRACKET	1	
6	33000841	T MAP SENSOR	1	
7	33000954	KNOCK SENSOR	2	
8	33000965	BRACKET	1	
9	33000966	STUD	2	
10	33000969	GUARD	2	
11	33001155	HARNESS	1	NOT SHOWN
12	35000160	NUT	4	
13	35000309	WASHER	1	
14	35000339	WASHER	1	
15	35000429	BOLT	5	
17	35000634	BOLT	2	
18	35000682	NUT	8	
19	35000683	BOLT	4	
20	35000694	BOLT	1	
21	35000696	BOLT	4	

Power Solutions International
201 Mittel Dr., Wood Dale, IL 60191 | Te. +10 630 350 9400 | Fax. +1 630 350 9588
Web: www.psiengines.com | email: parts@psiengines.com

FLYWHEEL ADAPTER

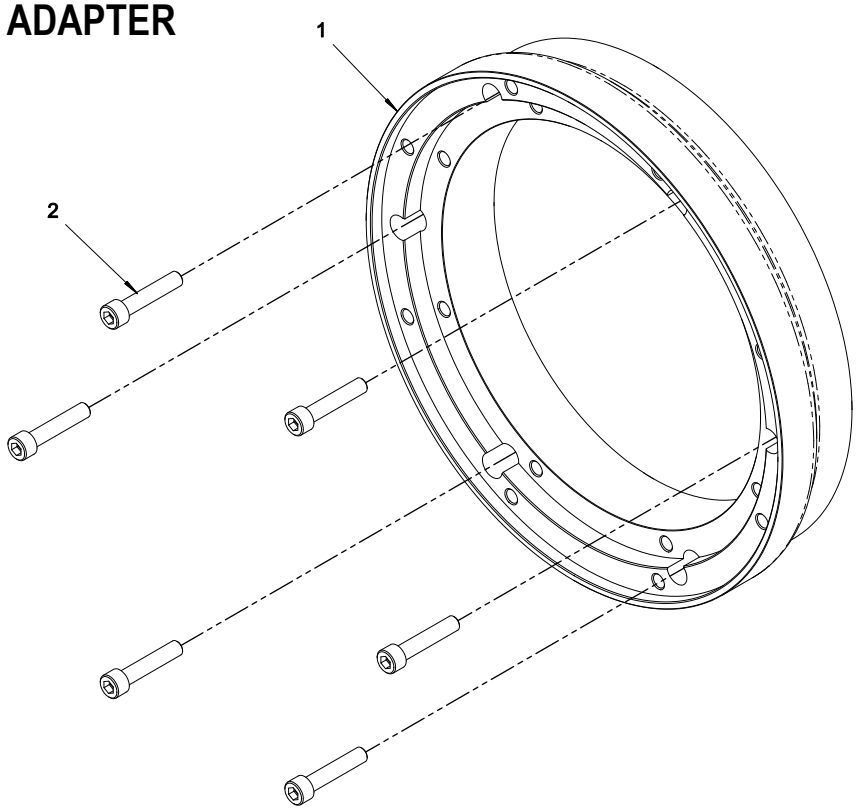

POS.	PART NUMBER	DESCRIPTION	QTY	NOTES
1	30500388	ADAPTER	1	
2	35000492	BOLT	6	

Power Solutions International
201 Mittel Dr., Wood Dale, IL 60191 | Te. +10 630 350 9400 | Fax. +1 630 350 9588
Web: www.psiengines.com | email: parts@psiengines.com

FLYWHEEL HOUSING

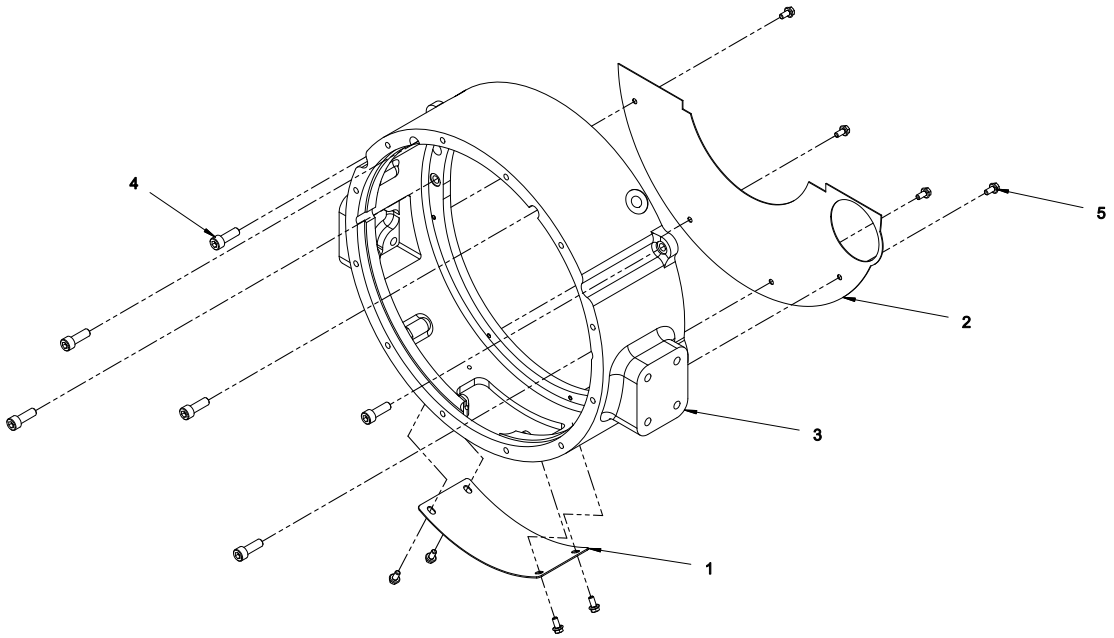

38080204-04

POS.	PART NUMBER	DESCRIPTION	QTY	NOTES
1	30500008	PLATE	1	
2	30500083	PLATE	1	
3	30500387	FLYWHEEL HOUSING	1	
4	35000249	BOLT	6	
5	35000541	BOLT	8	

Power Solutions International
201 Mittel Dr., Wood Dale, IL 60191 | Te. +10 630 350 9400 | Fax. +1 630 350 9588
Web: www.psiengines.com | email: parts@psiengines.com

STARTER ADAPTER

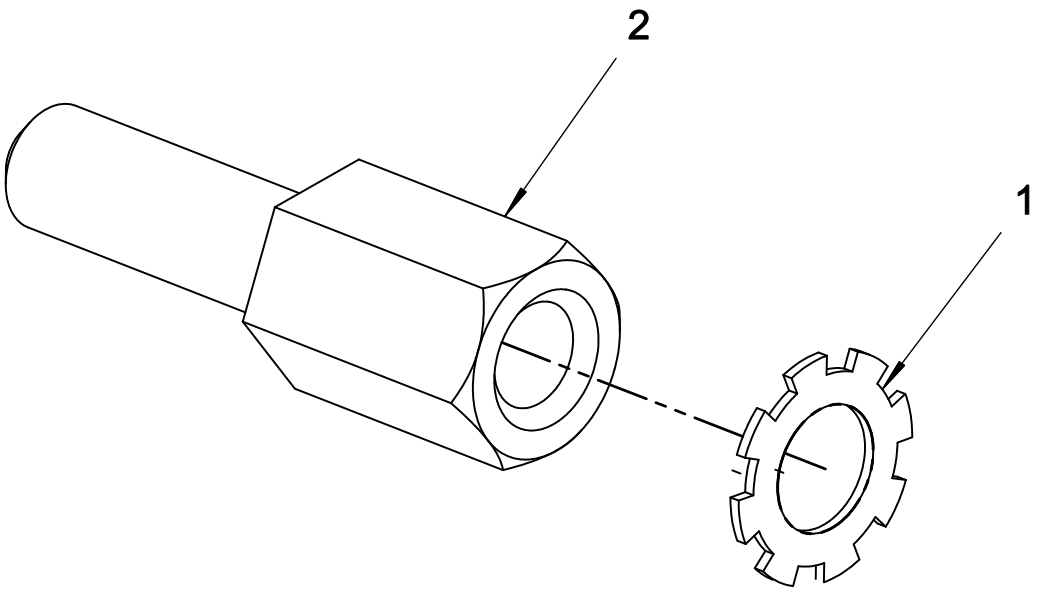

38080314-01

POS.	PART NUMBER	DESCRIPTION	QTY	NOTES
1	35000909	WASHER	1	
2	33000913	ADAPTER	1	

Power Solutions International
201 Mittel Dr., Wood Dale, IL 60191 | Te. +10 630 350 9400 | Fax. +1 630 350 9588
Web: www.psiengines.com | email: parts@psiengines.com

FAN SPACER

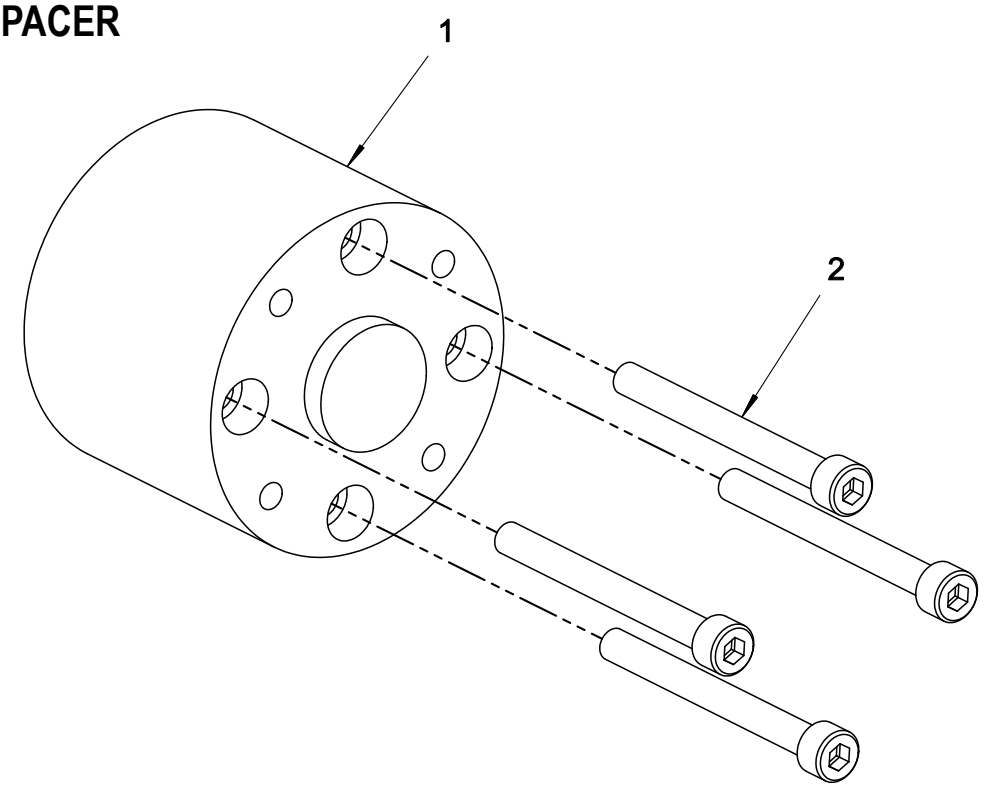

38080606-01

POS.	PART NUMBER	DESCRIPTION	QTY	NOTES
1	32000264	SPACER	1	
2	35000156	BOLT	4	

Power Solutions International
201 Mittel Dr., Wood Dale, IL 60191 | Te. +10 630 350 9400 | Fax. +1 630 350 9588
Web: www.psiengines.com | email: parts@psiengines.com

FRONT MOUNT

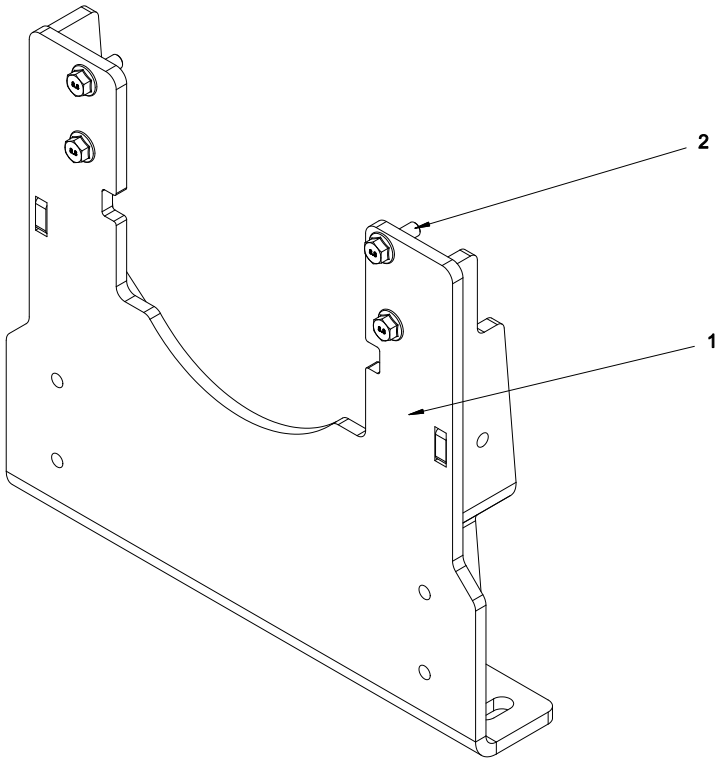

38080901-02

POS.	PART NUMBER	DESCRIPTION	QTY	NOTES
1	31000043	MOUNT	1	
2	65000053	BOLT	4	

Power Solutions International
201 Mittel Dr., Wood Dale, IL 60191 | Te. +10 630 350 9400 | Fax. +1 630 350 9588
Web: www.psiengines.com | email: parts@psiengines.com

LIFT EYE

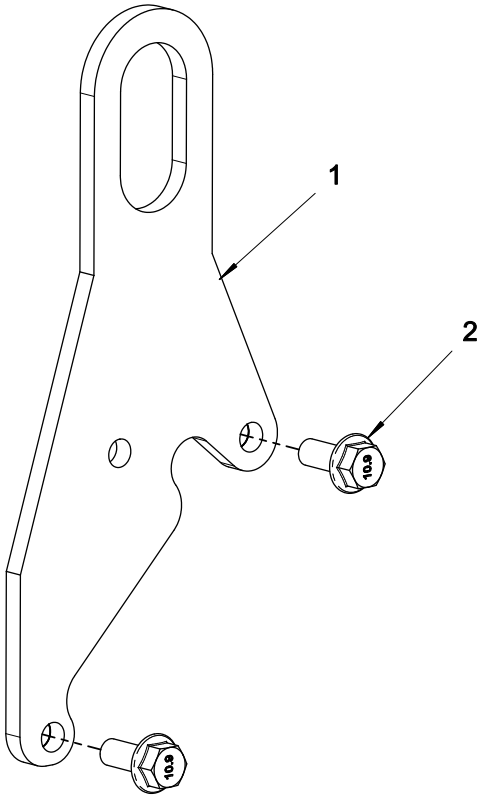

38080907-03

POS.	PART NUMBER	DESCRIPTION	QTY	NOTES
1	30100003	LIFT EYE	1	
2	35000847	BOLT	2	

Power Solutions International
201 Mittel Dr., Wood Dale, IL 60191 | Te. +10 630 350 9400 | Fax. +1 630 350 9588
Web: www.psiengines.com | email: parts@psiengines.com

EXHAUST TUBES

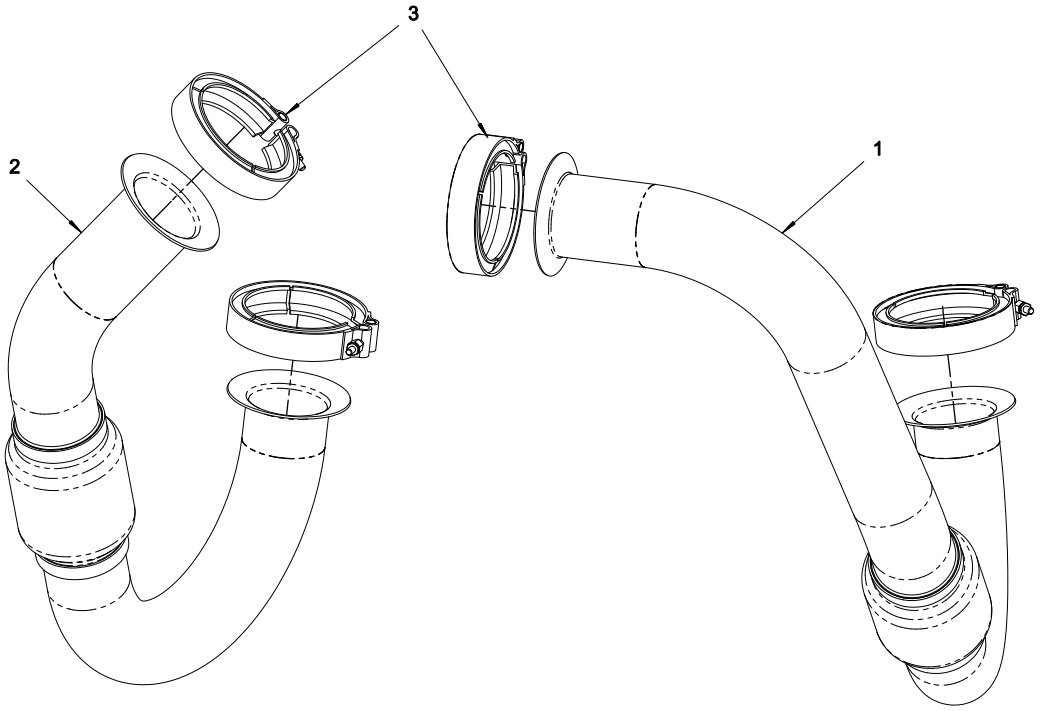

38080833-02

POS.	PART NUMBER	DESCRIPTION	QTY	NOTES
1	33500735	RIGHT TUBE	1	
2	33500736	LEFT TUBE	1	
3	33500841	CLAMP	4	

Power Solutions International
201 Mittel Dr., Wood Dale, IL 60191 | Te. +10 630 350 9400 | Fax. +1 630 350 9588
Web: www.psiengines.com | email: parts@psiengines.com

TURBO EXHAUST ADAPTER

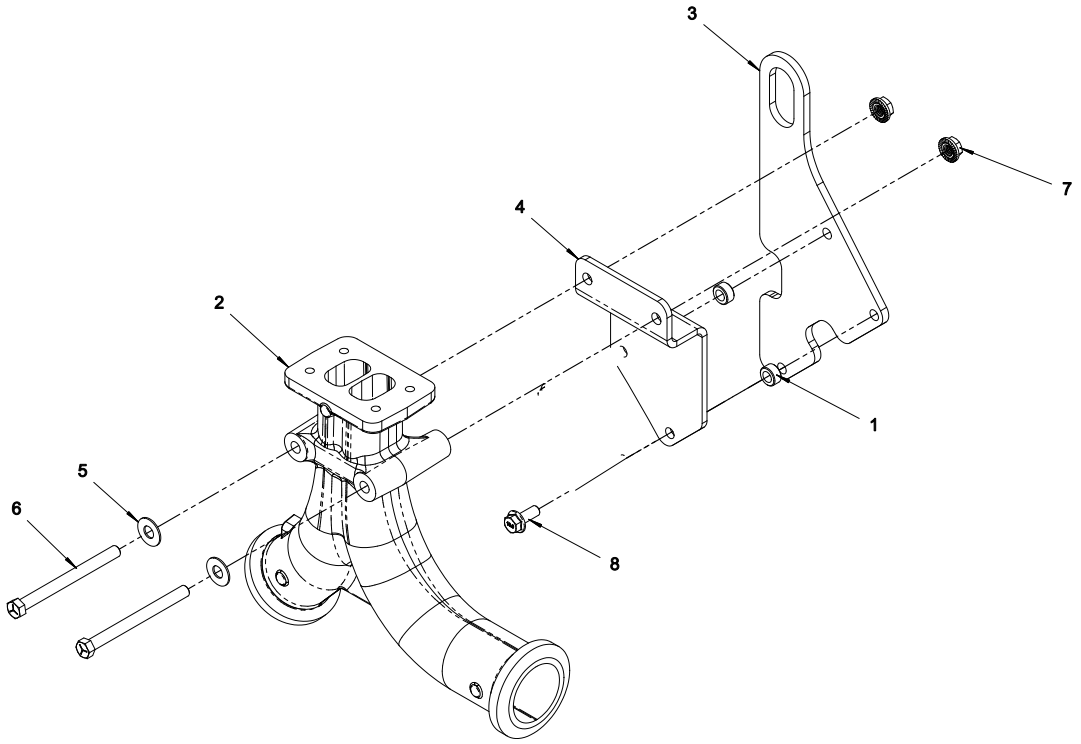

38080838-04

POS.	PART NUMBER	DESCRIPTION	QTY	NOTES
1	33500130	SPACER	2	
2	33500734	ADAPTER	1	
3	33500753	LIFT EYE BRACKET	1	
4	33500754	EXHAUST BRACKET	1	
5	35000369	WASHER	2	
6	35000704	BOLT	2	
7	35000705	NUT	2	
8	35000847	BOLT	1	
9	35000848	BOLT	1	NOT SHOWN
10	35000860	BOLT	1	NOT SHOWN

Power Solutions International
201 Mittel Dr., Wood Dale, IL 60191 | Te. +10 630 350 9400 | Fax. +1 630 350 9588
Web: www.psiengines.com | email: parts@psiengines.com

ENGINE COOLANT OUTLET

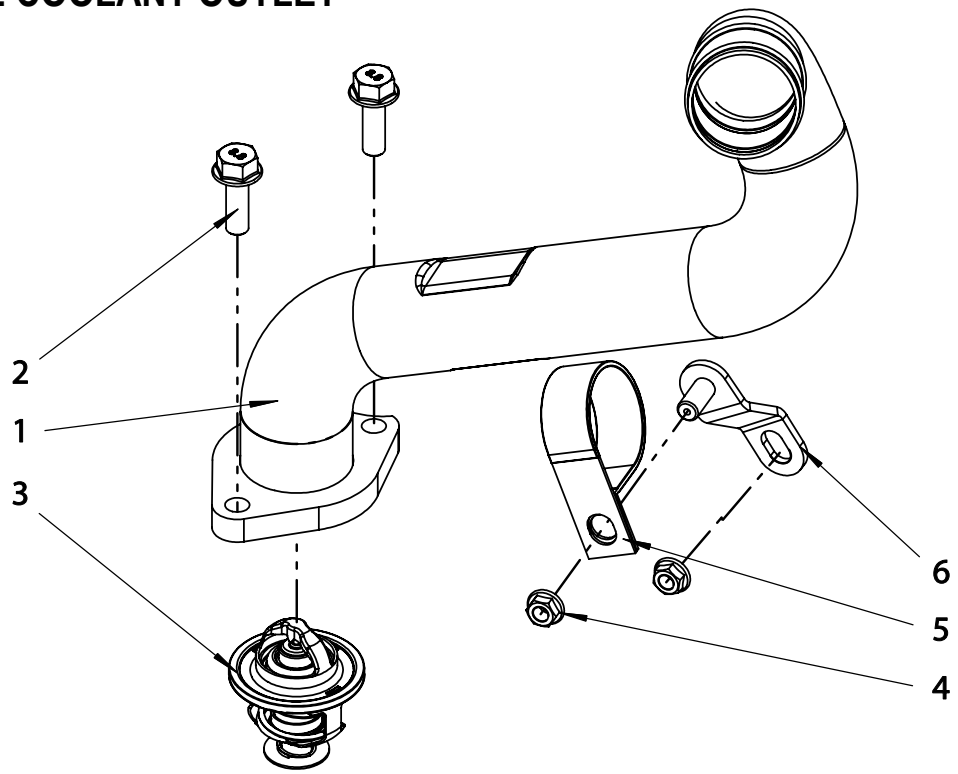

88086009-01

POS.	PART NUMBER	DESCRIPTION	QTY	NOTES
1	32001247	COOLANT TUBE	1	
2	35000821	BOLT	2	
3	38901265	THARMOSTAT	1	
4	35001086	NUT	2	
5	32001260	P-CLAMP	1	
6	32001261	BRACKET	1	

Power Solutions International
201 Mittel Dr., Wood Dale, IL 60191 | Te. +10 630 350 9400 | Fax. +1 630 350 9588
Web: www.psiengines.com | email: parts@psiengines.com

EXHAUST MANIFOLD

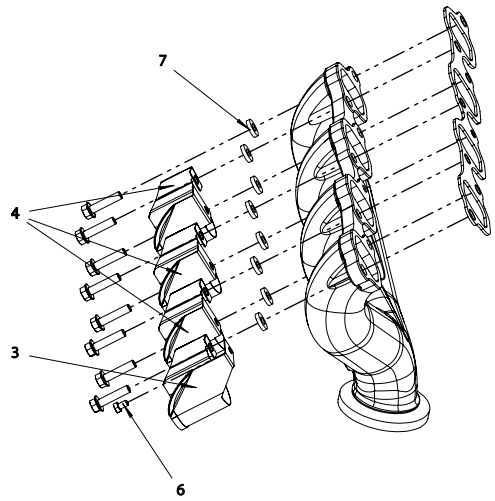

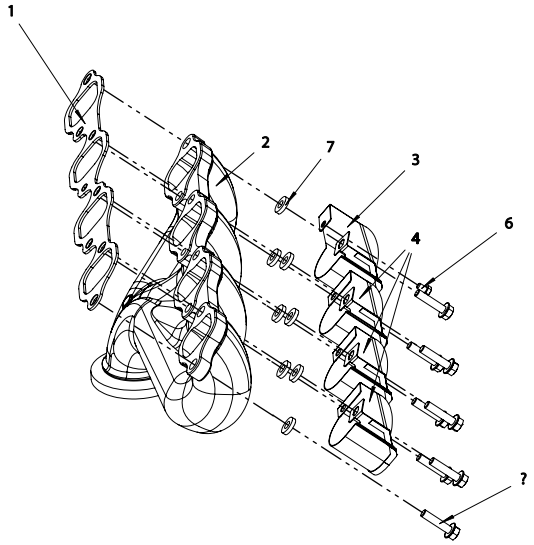

38080859-01

POS.	PART NUMBER	DESCRIPTION	QTY	NOTES
1	33500014	GASKET	2	
2	33500732	MANIFOLD	2	
3	33000595	SHIELD	2	
4	33001596	HEAT SHIELD	6	
5	35001079	BOLT	16	
6	35000355	BOLT	2	
7	35000235	WASHER	16	

Power Solutions International
201 Mittel Dr., Wood Dale, IL 60191 | Te. +10 630 350 9400 | Fax. +1 630 350 9588
Web: www.psiengines.com | email: parts@psiengines.com