DE30F4-XX/4
Parts List

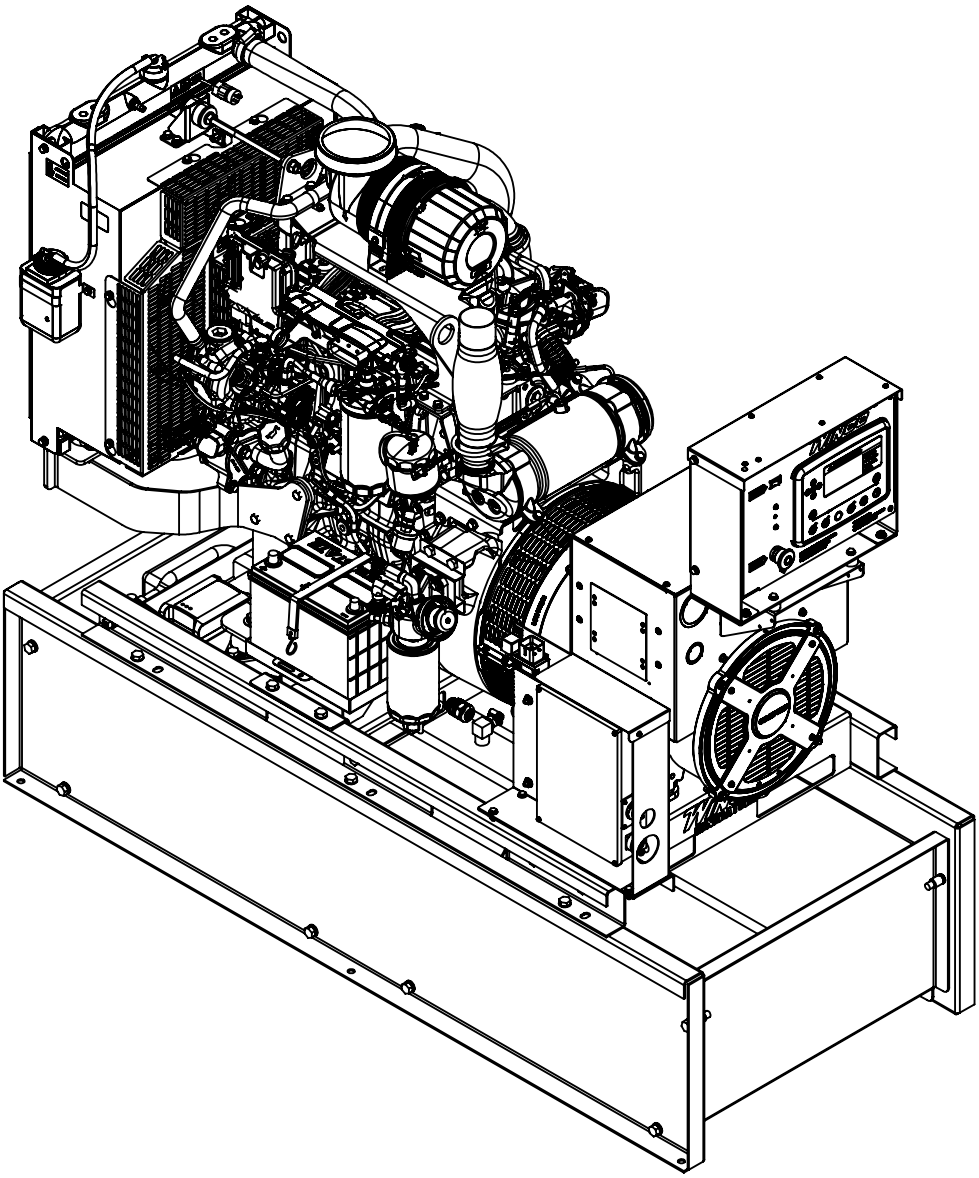

WINCO Service
Phone: 507-357-6831
Email: service@wincogen.com
www.wincogen.com

General Assembly

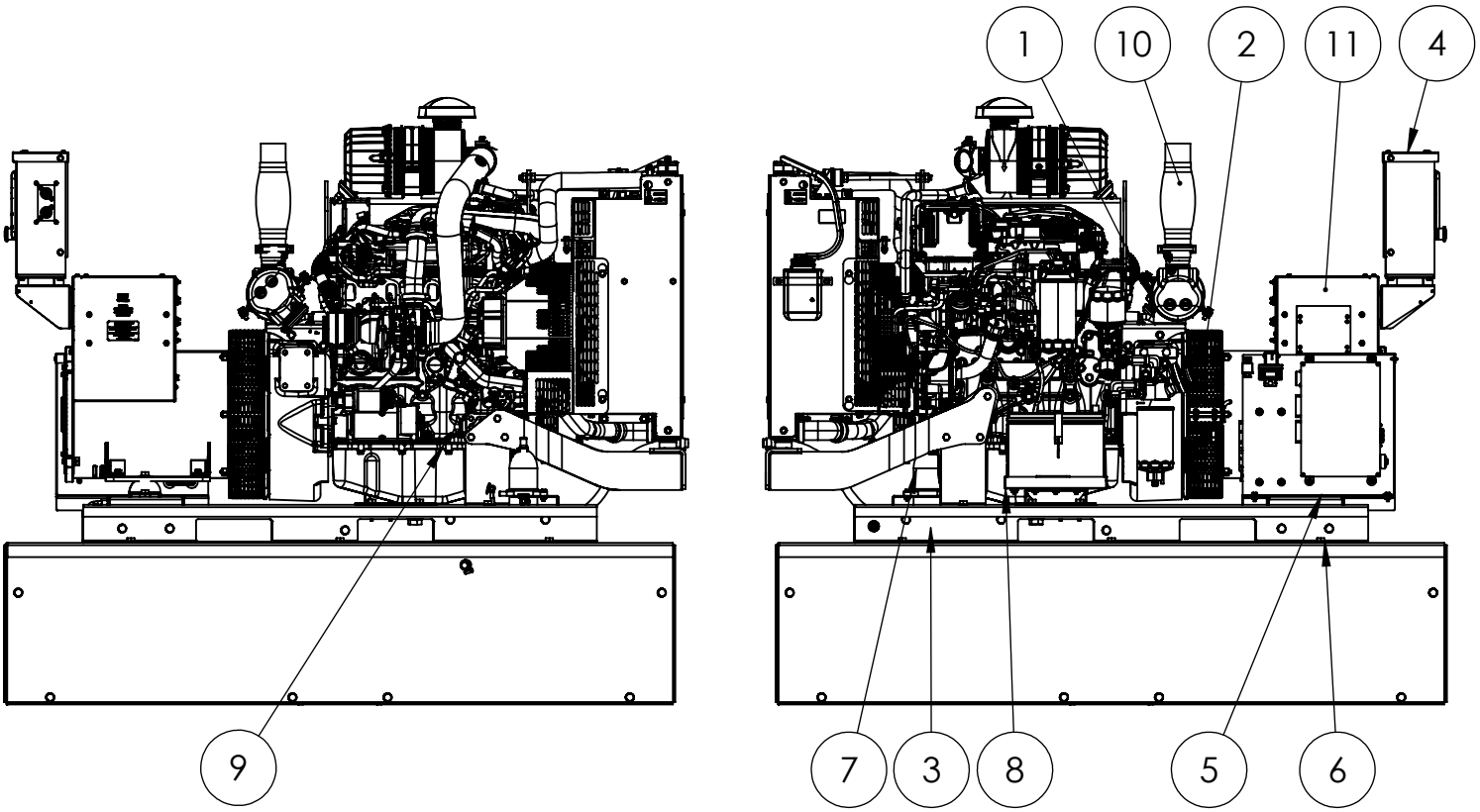

ITEM NO.	PART NUMBER	DESCRIPTION	QTY.
1	350001-108	ENGINE, FPT, 3.4L (LOW POWER), F34TE1W.S550, I-4, TURBO, 50HP, DIESEL, ECU, 12V,TIER 4 FINAL, SAE#3-11.5, 1800RPM, 60HZ	1
2	350023-[illegible]	GEN END S1L2-K1 SAE3-11	1
3	352020-26	BATTERY CHARGER KIT, 12V, 1.5 AMP	1
4	1000-0541	CONTROLLER MOUNT ASSEMBLY	1
5	1000-0547	DE30 BASE ASSEMBLY	1
6	1000-0554	DE FUEL TANK ASSEMBLY	1
7	80781-018	BLOCK HEATER WITH THERMOSTAT ASSY	1
8	805050-000	BATTERY TRAY KIT	1
9	80765-010	BATTERY 12V 650CCA GROUP 24	1
10	1000-0572	DE30 HARDWARE KIT	1
11	2000-0175	DE30 TERMINAL BOX ASSEMBLY	1
12	411050-001	ENGINE ECU HARNESS FPT F5C	1
13	15715-090	DECAL AND NAMEPLATE INSTALLATION	1
14	411050-004	HARNESS FTP F5C	1

Engine

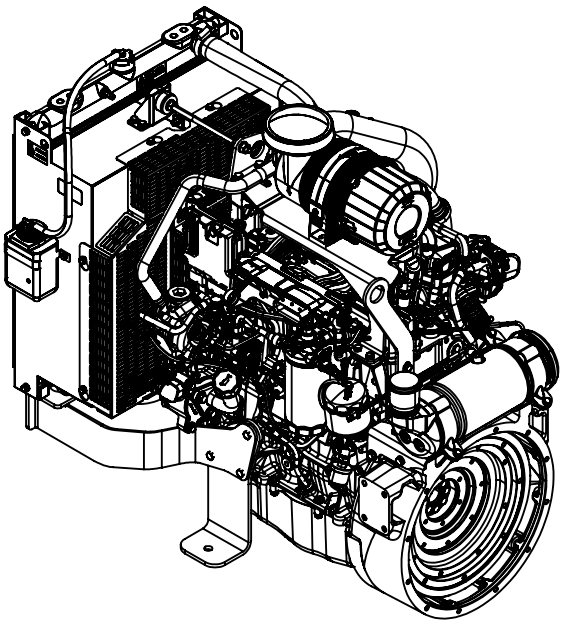

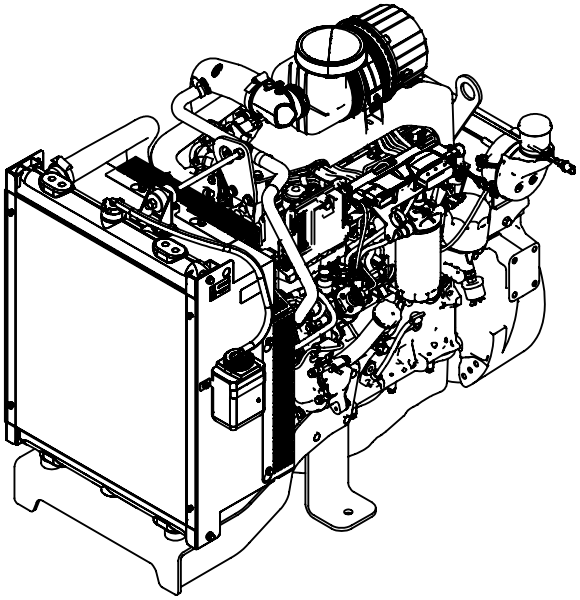

ITEM NO.	PART NUMBER	DESCRIPTION	QTY.
1	6-137	AIR FILTER	1
2	6-138	OIL FILTER	1
3	6-139	FUEL FILTER	1
4	6-140	WATER SEPARATOR FILTER	1
ALL ITEMS LISTED IN THE ABOVE TABLE ARE INCLUDED WITH A 16200-021 MAINTENANCE KIT PURCHASE			
5	6-218	STARTER MOTOR	1
6	6-217	ALTERNATOR	1
7	6-219	FAN BELT	1
Contact Winco service for full engine parts support.			

Radiator Assembly

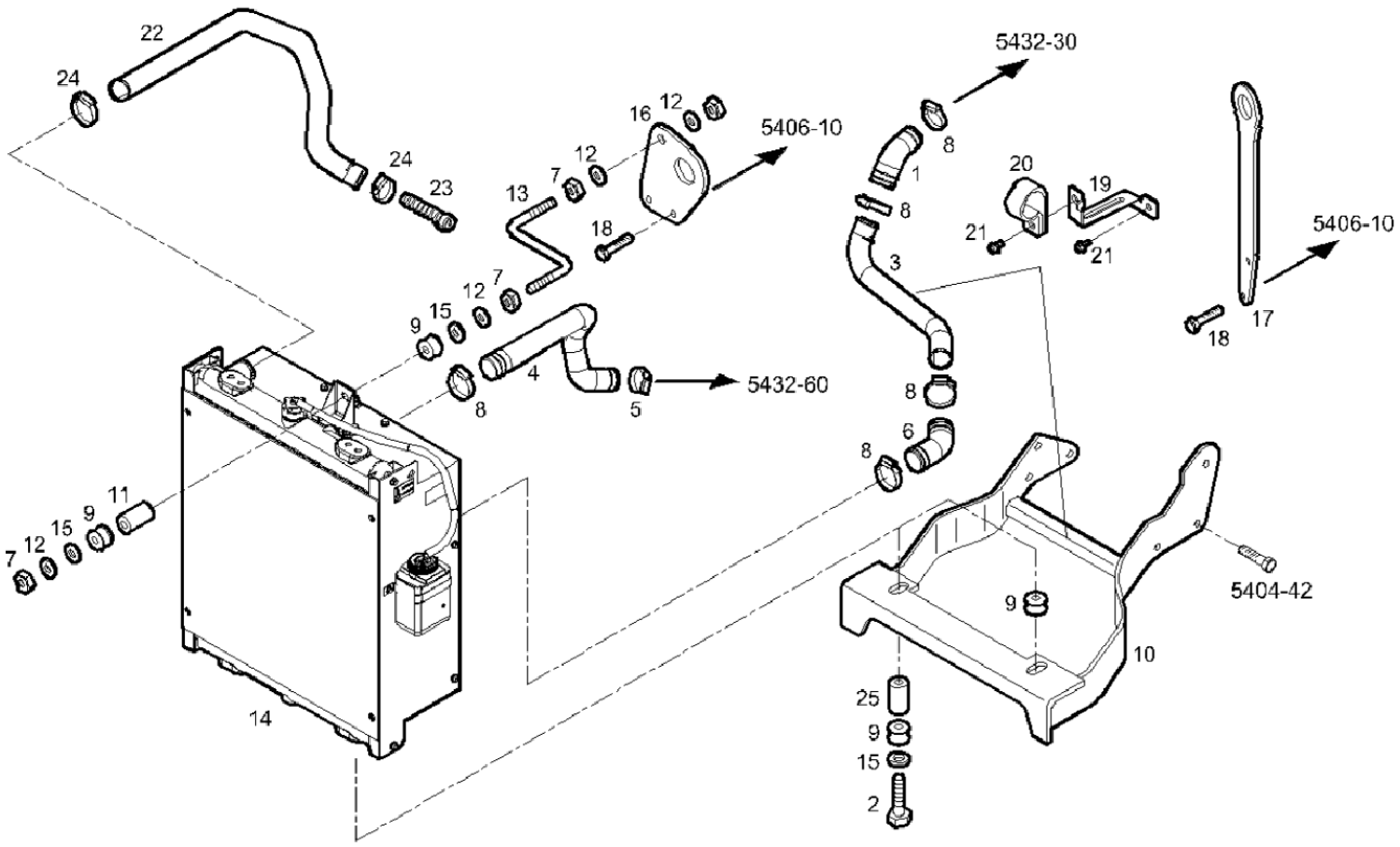

ITEM NO.	PART NUMBER	DESCRIPTION	QTY.
1	6-199	RUBBER SLEEVE	1
4	6-200	RUBBER SLEEVE	1
6	6-201	RUBBER SLEEVE	1
22	6-202	RUBBER SLEEVE	1
Contact Winco service for full engine parts support.			

Engine Intake Assembly

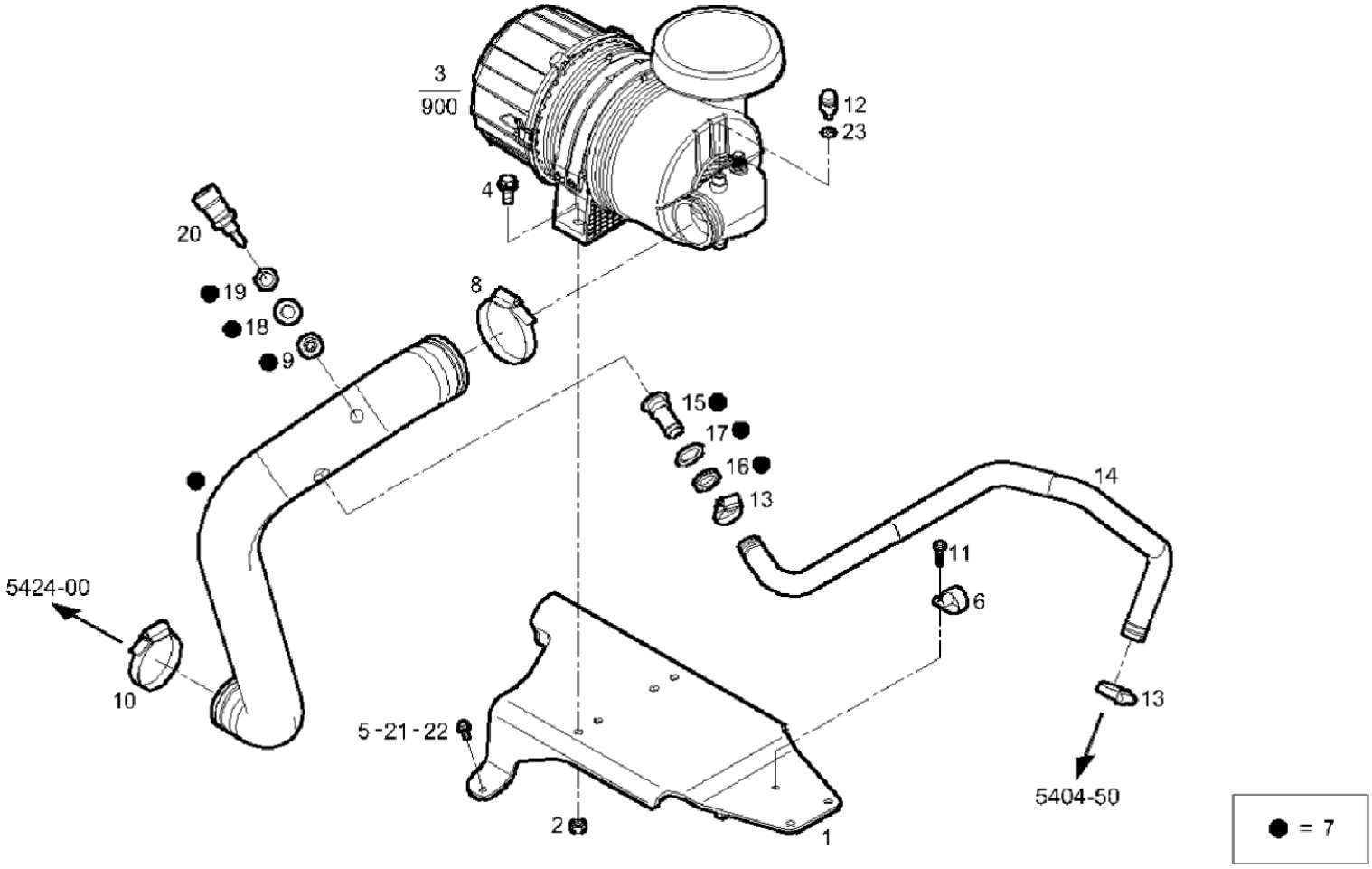

ITEM NO.	PART NUMBER	DESCRIPTION	QTY.
7	6-180	FILTER HOSE	1
14	6-213	RUBBER SLEEVE	1
20	6-133	AIR TEMP SENSOR	1
Contact Winco service for full engine parts support.			

Particle Filter and Temp Sensor

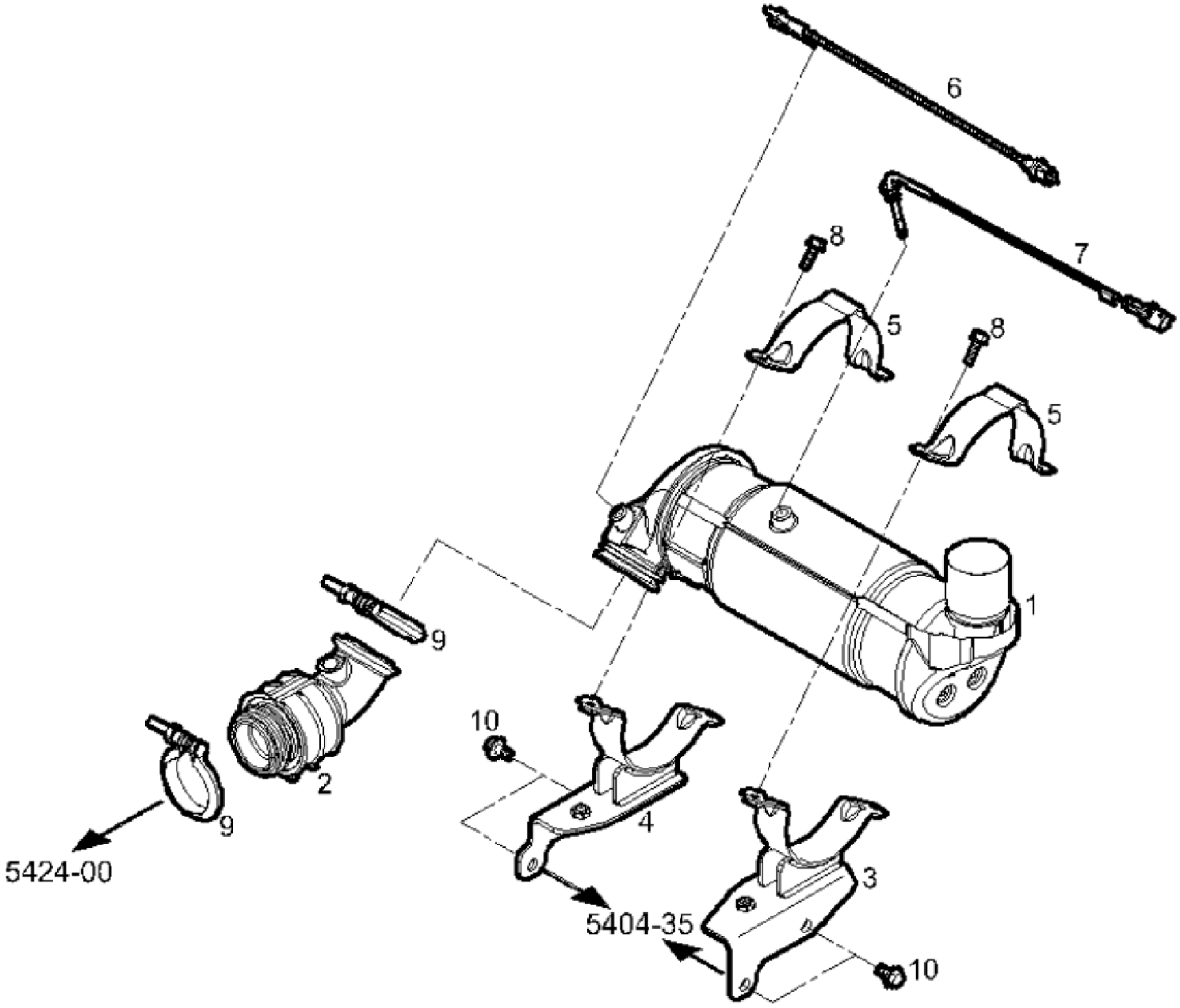

ITEM NO.	PART NUMBER	DESCRIPTION	QTY.
1	6-210	DPF PARTICLE FILTER	1
6	6-211	EXHAUST GAS TEMP SENSOR	1
7	6-212	EXHAUST GAS TEMP SENSOR	1
Contact Winco service for full engine parts support.			

Sensors

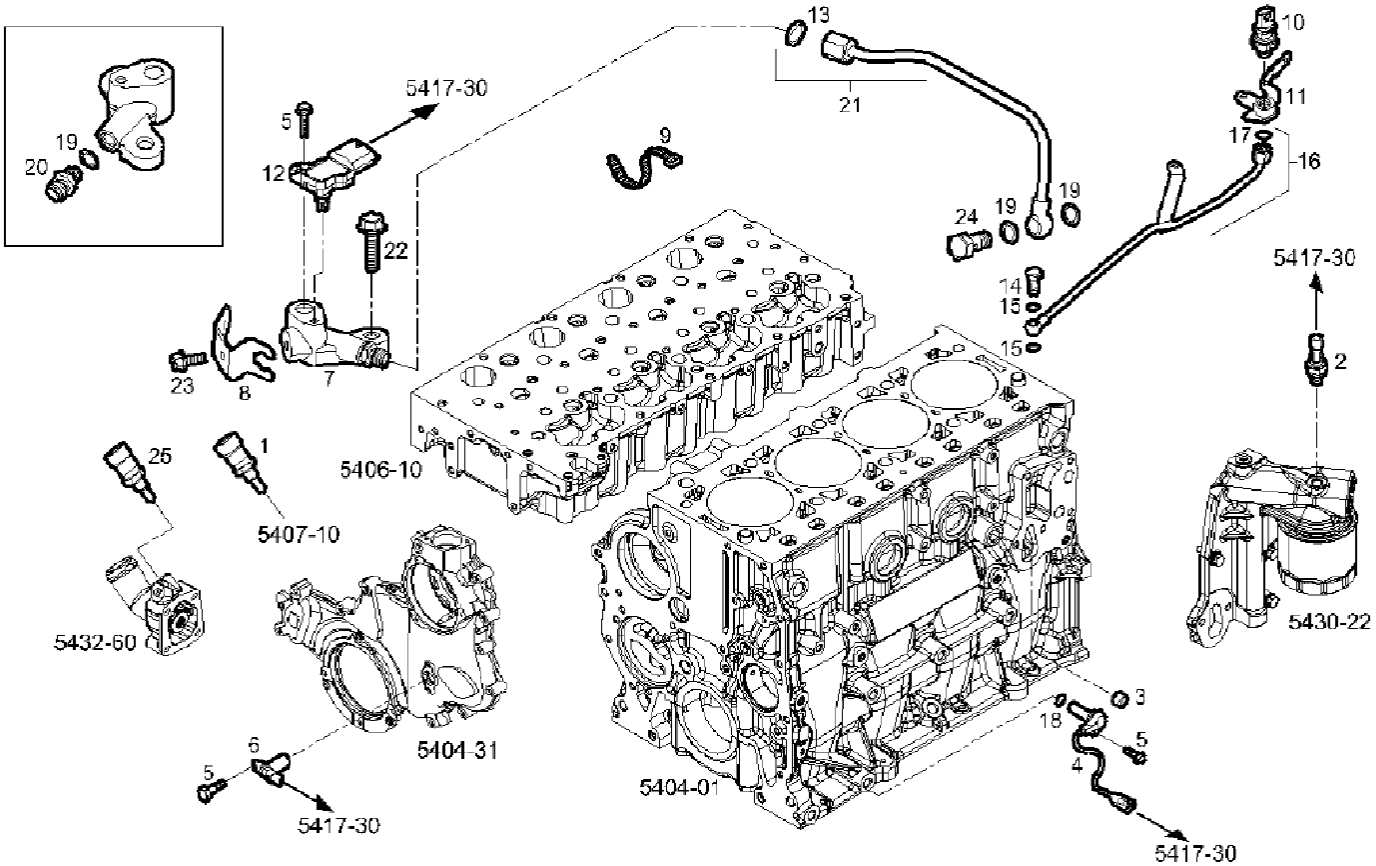

ITEM NO.	PART NUMBER	DESCRIPTION	QTY.
1	6-203	TEMP TRANSMITTER	1
2	6-204	PRESSURE SWITCH	1
4	6-205	SPEED SENSOR	1
6	6-206	SPEED SENSOR	1
10	6-207	WATER PRESSURE SENSOR	1
12	6-208	SENSOR	1
25	6-209	TEMP SENSOR	1
Contact Winco service for full engine parts support.			

Hardware Kit

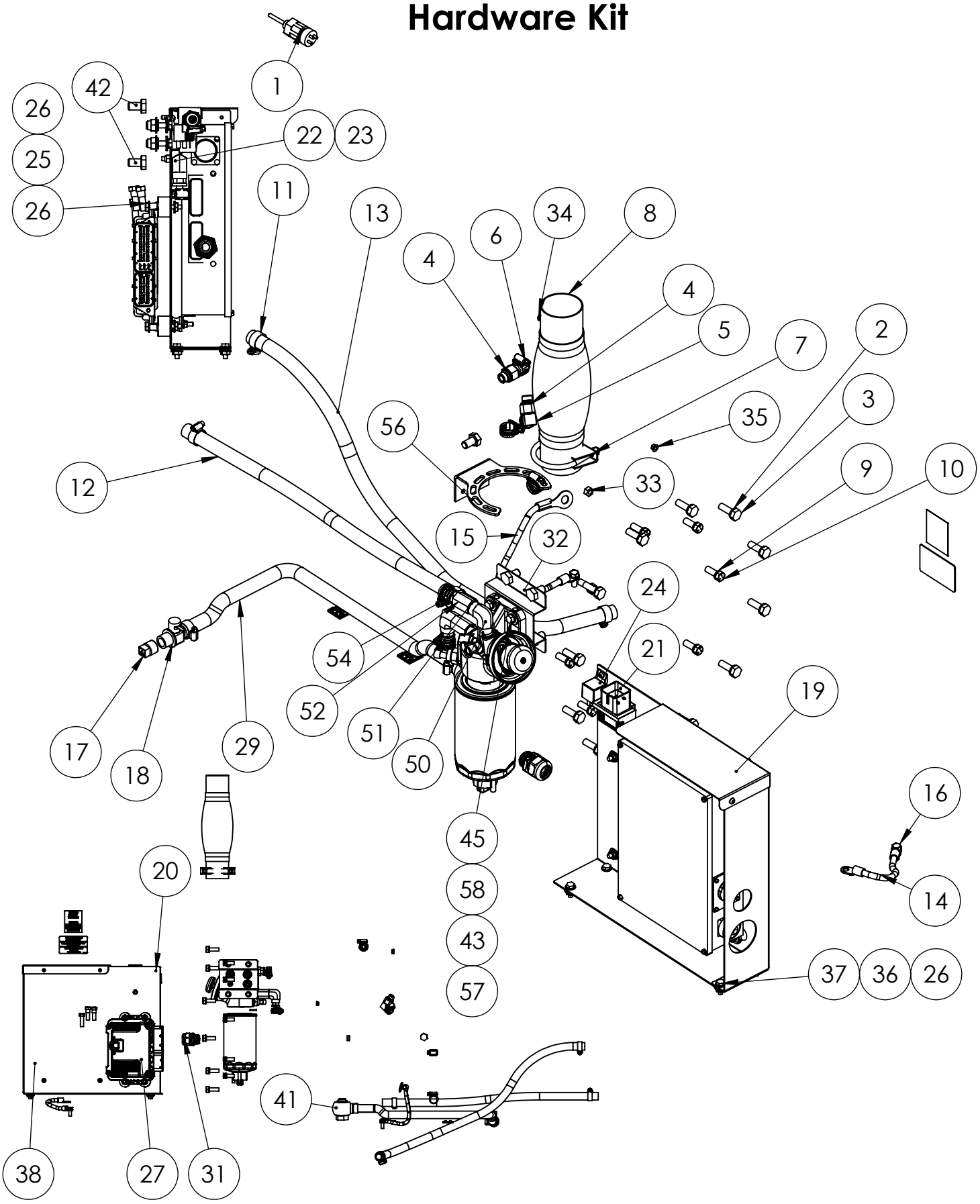

Hardware Kit continued

ITEM NO.	PART NUMBER	DESCRIPTION	QTY.
1	6-117	LOW COOLANT SENSOR	1
2	97436-010	M10 LOCKWASHER	12
3	96003-030	M10-1.5X30MMM	12
4	300349-9	ADAPTER M18X1.5(M) X 3/8-18NPT (F)	2
5	92382-000	HOSE FIT.ELBOW .375NPT X .625 HOSE	1
6	92388-000	HOSE FIT .375NPT X .625 HOSE	1
7	93489-002	MUFFLER CLAMP 2.5"	1
8	64743-002	2.5" X 8 FLEX	1
9	481-001	LOCKWASHER 3/8 SPLIT BLACK	8
10	350253-2	.375-24X1 HHB BLACK	8
11	81018-005	HOSE CLAMP 1.0625-.500	6
12	56107-003	RED HOSE 5/8ID RUBR.24IN	1
13	56107-005	HOSE 5/8ID RUBR.30IN	1
14	93542-018	LEAD WIRE	1
15	93542-013	LEAD WIRE ASSY	1
16	65004-001	SELF TAP.SC. 5/16-18X.75	2
17	93084-000	PIPE PLUG .50 GALV	1
18	98906-004	OIL DRAIN VALVE .5-14 NPTX.625T-202N	1
19	803050-005	BLACK BOX COVER	1
20	21698-001	TORX PAN HEAD SCREW #10	2
21	6-115	GLOW PLUG CONTROLLER	1
22	466-000	.25-20X.75 HHB	1
23	47517-000	.25-20 NYLOCK	1
24	59944-016	RELAY 12VDC 30AMP SPDT	1
25	71605-003	SHOCKMOUNT, BLACK, 30-35 DURO	4
26	16248-000	.25-20 FLANGE NUT	12
27	6-114	ENGINE CONTROL UNIT	1
28	95810-000	CABLE TIE HOLDER	2
29	93689-001	HOSE, 0.625 ID, 25 IN. LONG	1
30	22627-000	3/4 NPT CONDUIT NUT	1
31	93073-031	CORD GRIP .75 NPT	1
32	1000-0778	F5C FUEL FILTER MOUNT	1
33	94442-003	NUT HEX M8-1.25 ZINC	1
34	64841-001	M6-1.0 FLANGE NUT ZINC	1
35	64841-000	NUT HEX M5-0.8 FLANGE LOCK ZINC	1
36	65005-000	.25 WASHER SS	4
37	65000-001	.25-20X.75 SS HHCS	4
38	1000-0579	DE BLACK BOX BRACKET	1
39	16504-000	DECAL-NEUTRAL BONDED TO FRAME	1
40	16200-521	MAINTENANCE KIT DECAL	1
41	1000-1600	OIL DRAIN KIT, BANJO STYLE	1
42	94270-020	HHCS M12-175X 20MM	5
43	526-000	WASHER ID .375 OD .890	3
44	16250-000	.375-16 FLANGE NUT	3
45	580-000	5/16-18X1.25	3
46	2000-0044	SHIP LOOSE FOAM KIT FOR FIELD INSTALLATION	1
47	62825-014	SPACER .312 ID X .375 LONG	2
48	65015-002	M22 METAL SEALING WASHER	1
49	91658-002	HHCS 3/8-16X1.25	3
50	99875-000	ELBOW-STREET 3/8NPT 90DEG BRASS	2
51	96187-001	OIL DRAIN GASKET M14 ID	2
52	300349-1	OIL DRAIN ADAPTER	2
53	81018-006	HOSE CLAMP 7/8 TO 3/8 X 1/2 WIDE	6
54	94319-007	HOSE FIT. .375-18NPT X .375 HOSE BARB	2
55	1000-0577	FPT F5C F34 LOOSE PARTS KIT	1
56	351929-2	BLOCK HEATER BRACKET	1
57	352126-1	RIVET NUT 5/16-18 .027-.150	3
58	480-000	5/16 SPLIT LOCKWASHER	3

Block Heater Assembly

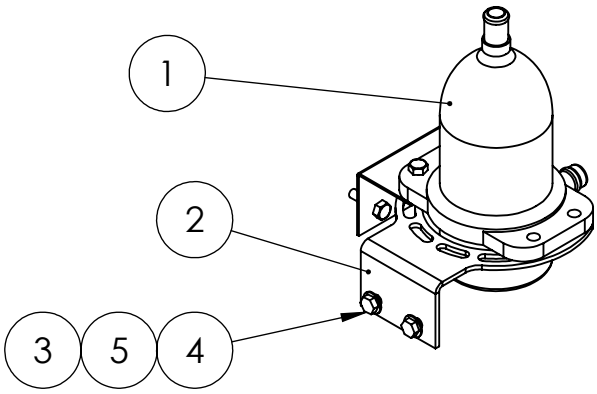

ITEM NO.	PART NUMBER	DESCRIPTION	QTY.
1	80781-018	BLOCK HEATER WITH THERMOSTAT ASSY	1
2	351929-2	BLOCK HEATER BRACKET	1
3	16248-000	.25-20 FLANGE NUT	2
4	65000-001	.25-20X.75 SS HHCS	2
5	65005-000	.25 WASHER SS	2

Base Frame Assembly

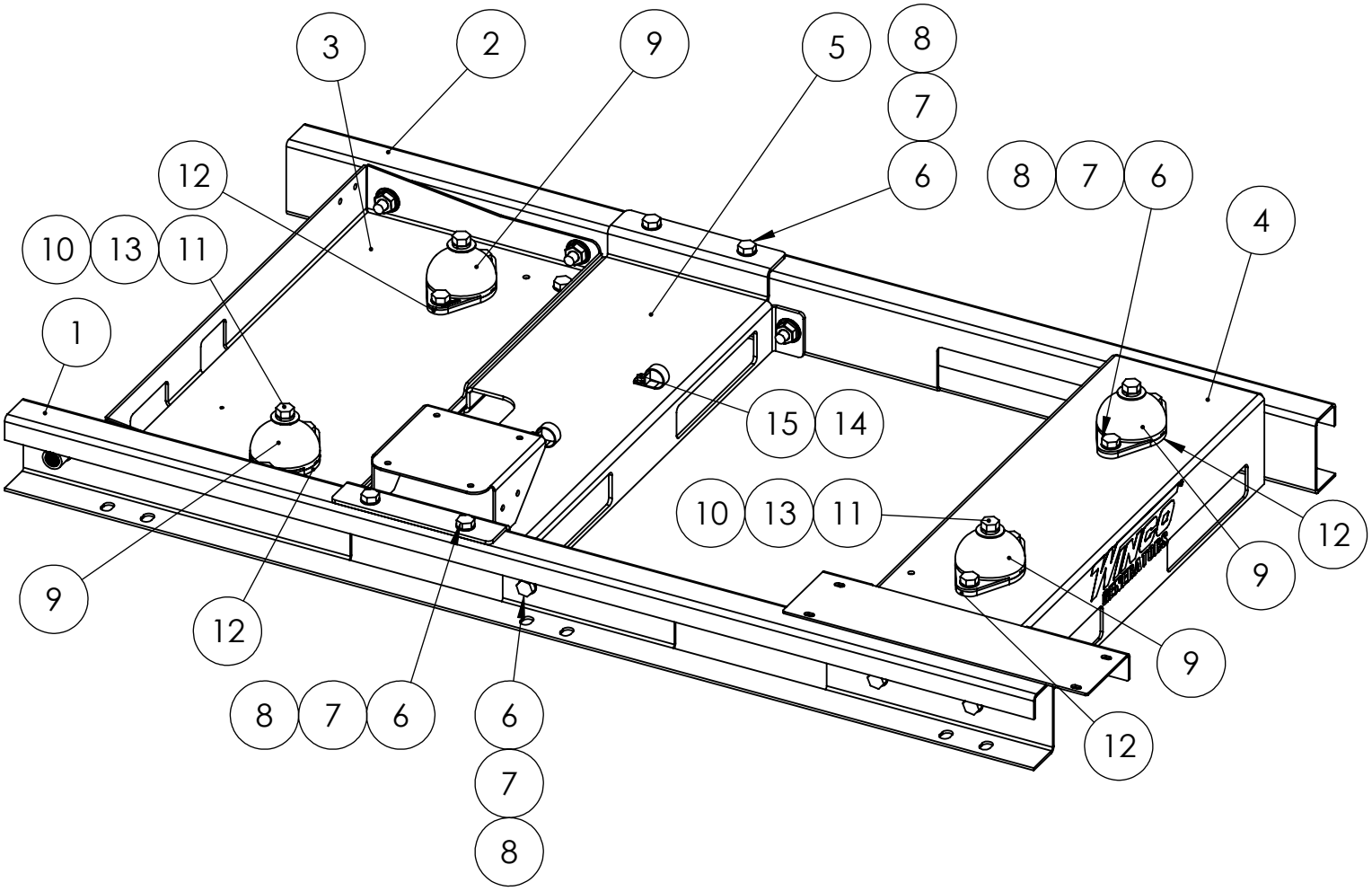

ITEM NO.	PART NUMBER	DESCRIPTION	QTY.
1	1000-0574	DE LEFT SIDE BASE RAIL WELDMENT	1
2	1000-0546	DE RIGHT SIDE BASE RAIL	1
3	1000-0540	DE ENGINE CROSSMEMBER	1
4	1000-0576	DE GEN CROSSMEMBER WELDMENT	1
5	1000-0565	DE FORWARD FORK POCKET WELDMENT	1
6	1516-000	.5-13X1.25 HHB	24
7	21867-001	FLAT WASHER .51 X .88 X .05	24
8	16248-001	.5-13 FLANGE NUT	24
9	98956-001	SHOCKMOUNT 40 DURO (GREEN DOT)	4
10	21867-000	FLAT WASHER	4
11	57580-000	.5-13X1.5 HHB	4
12	1000-0187	40 DURO SHOCKMOUNT SPACER	4
13	636-000	LOCKWASHER 1/2 SPLIT	4
14	97391-003	TUBE CLAMP/CUSH.WIRE 15/16	2
15	55440-000	.25-20X.5 SELF TAP	2

Base and Fuel Tank Assembly

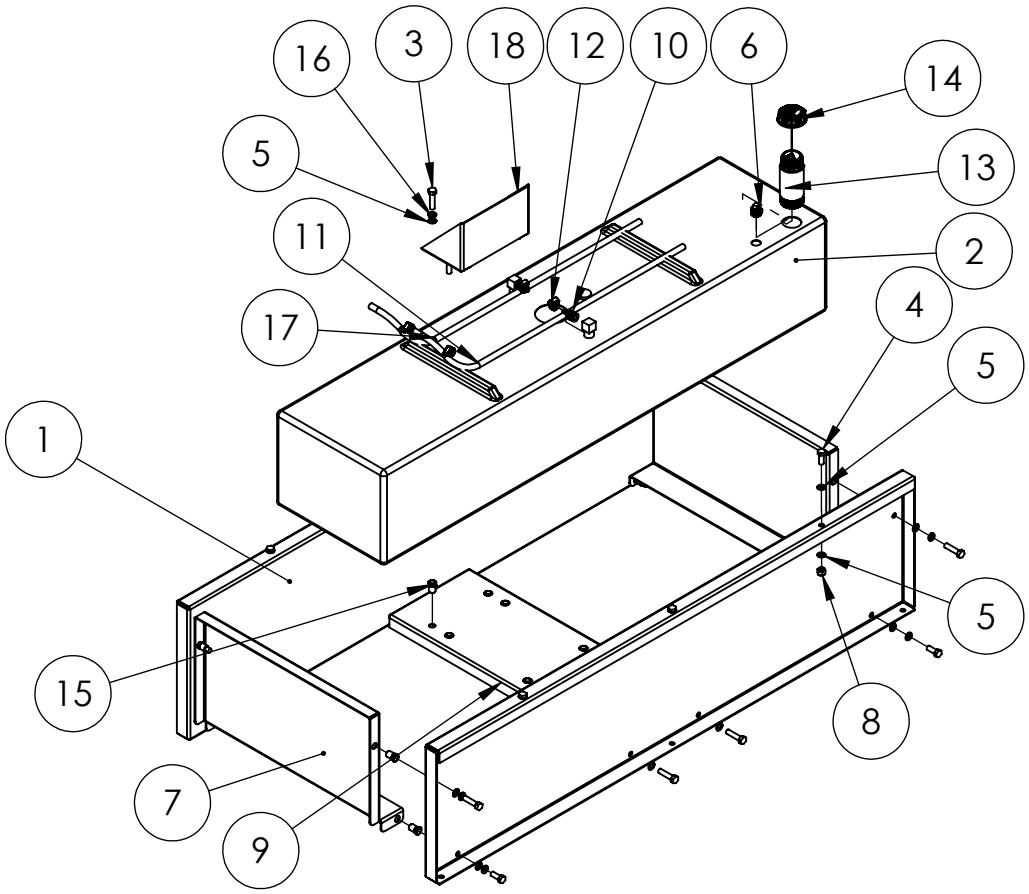

ITEM NO.	PART NUMBER	DESCRIPTION	QTY.
1	1000-0549	DE FUEL TANK SIDE RAIL	2
2	350041-142	FUEL TANK, 47 USEABLE GALLON, PLASTIC FUEL TANK WITH DIP TUBES	1
3	57580-000	.5-13X2.0 HHB	14
4	1516-000	.5-13X1.25 HHB	9
5	21867-001	FLAT WASHER .51 X .88 X .05	30
6	93564-000	PIPE PLUG 3/4 SQUARE HEAD	1
7	1000-0548	DE FUEL TANK END CAP	2
8	92242-000	NUT HEX .500-13 NYLOCK	7
9	1000-0550	DE CENTER FUEL TANK CROSSMEMBER	1
10	94319-008	HOSE FIT. .500-14NPT X .375 HOSE BARB	2
11	55505-028	HOSE 3/8 ID X 55" LONG	1
12	81018-006	HOSE CLAMP 7/8 TO 3/8 X 1/2 WIDE	4
13	15482-010	FUEL NECK ADAPTER 2.25" FILL	1
14	15482-011	FUEL CAP, 2.25 INCH, 2-WAY VENTED, TETHERED, DIESEL ONLY, GREEN, 8IN TETHER	1
15	352125-3	RIVET NUT 0.5-13, .063 - .200 (SHEET METAL HOLES SIZE .6875)	20
16	636-000	LOCKWASHER 1/2 SPLIT	16
17	55505-024	HOSE 3/8 ID X 50" LONG	1
18	1000-0551	DE CENTER FUEL TANK STOP	1

Battery Chargers

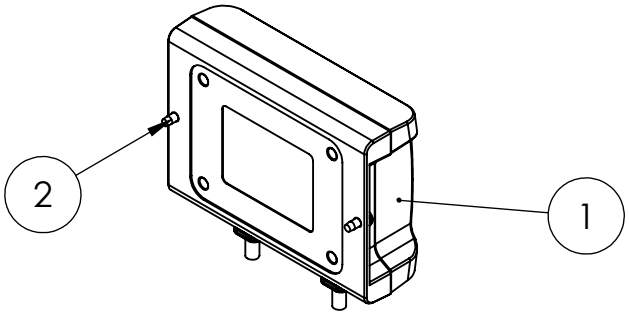

ITEM NO.	PART NUMBER	DESCRIPTION	QTY.
1	72036-022	BATTERY CHARGER, 12VDC, 1.5AMP, GUEST 2701A	1
2	21698-001	TORX PAN HEAD SCREW #10	2

Battery Kit

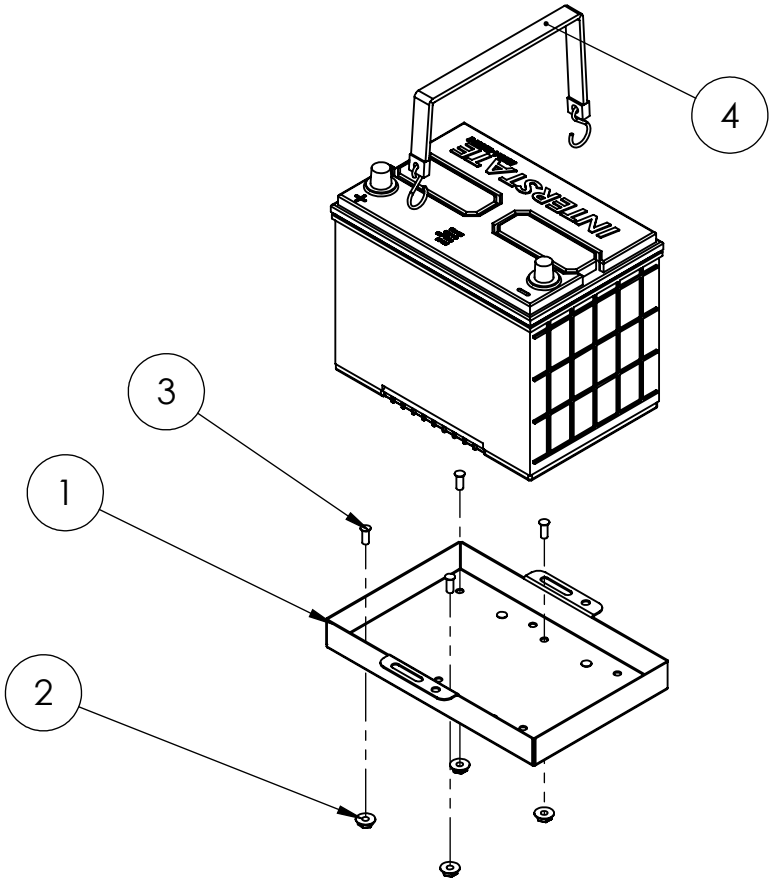

ITEM NO.	PART NUMBER	DESCRIPTION	QTY.
1	805050-001	BATTERY TRAY	1
2	16248-000	.25-20 FLANGE NUT	8
3	94980-001	THREAD STUD .25-20X.625	8
4	16329-001	RUBBER STRAP, BATTERY HOLD DOWN	1
5	53220-050	BATTERY CABLE 49" (NEGATIVE)	1
6	53220-069	BATTERY CABLE 48" (POSITIVE)	1

Controls

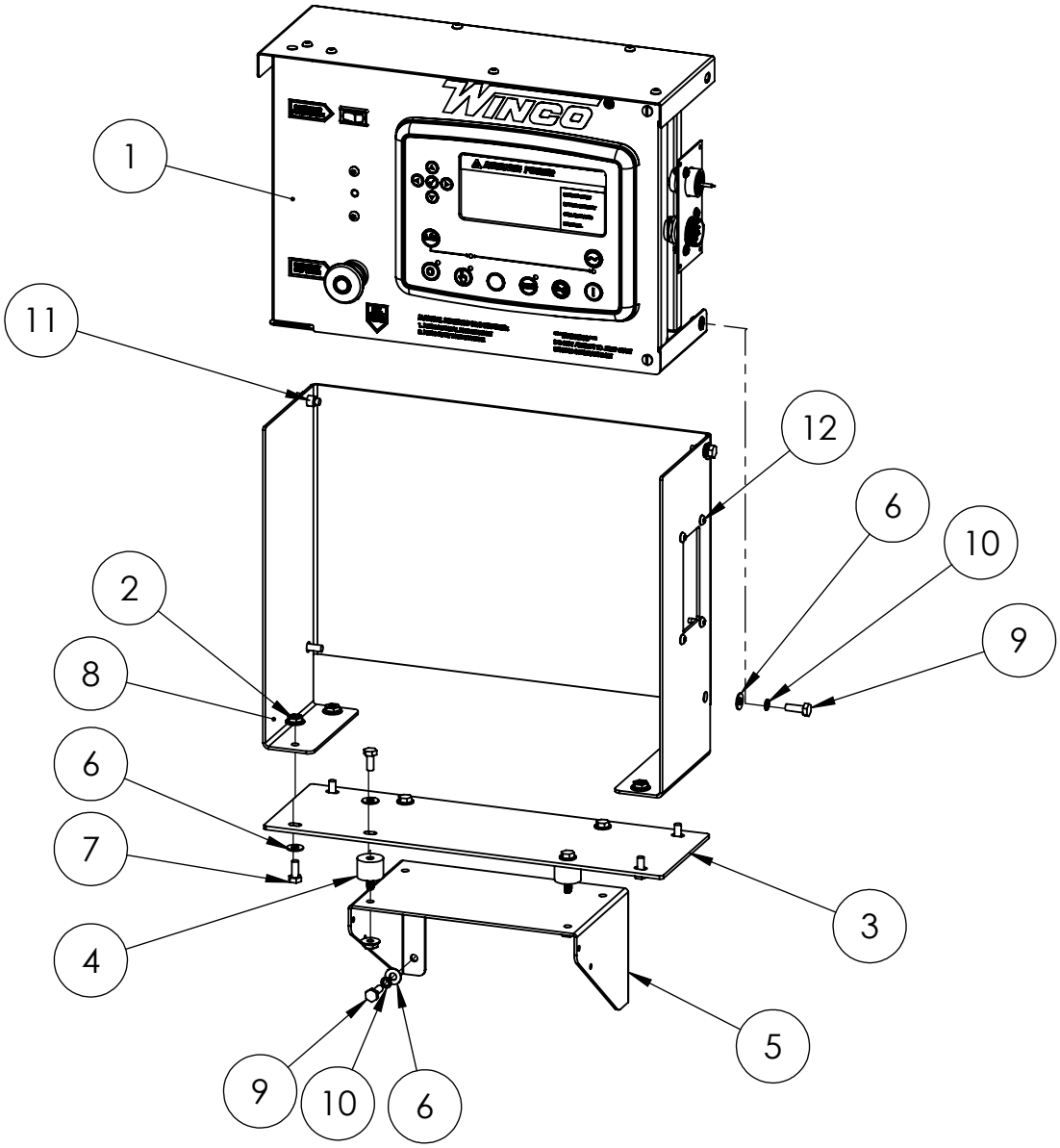

ITEM NO.	PART NUMBER	DESCRIPTION	QTY.
1	351891-51	ECU ENGINE CONTROLLER	1
2	16248-000	.25-20 FLANGE NUT	8
3	1000-0542	CONTROLLER VIBE MOUNT	1
4	64062-002	SHOCKMOUNT .25 50 DURO	4
5	1000-0561	CONTROLLER SIDE PEDESTAL	1
6	512-000	.25 WASHER	16
7	476-000	.25-20X.625 HHB	8
8	1000-0568	CONTROLLER BOX MOUNT	1
9	466-000	.25-20X.75 HHB	8
10	479-000	LOCK WASHER, .25" SPLIT	8
11	352125-1	1/4-20 RIVET NUT 22 GA-10GA	2
12	21698-001	TORX PAN HEAD SCREW #10	4

Controls Continued

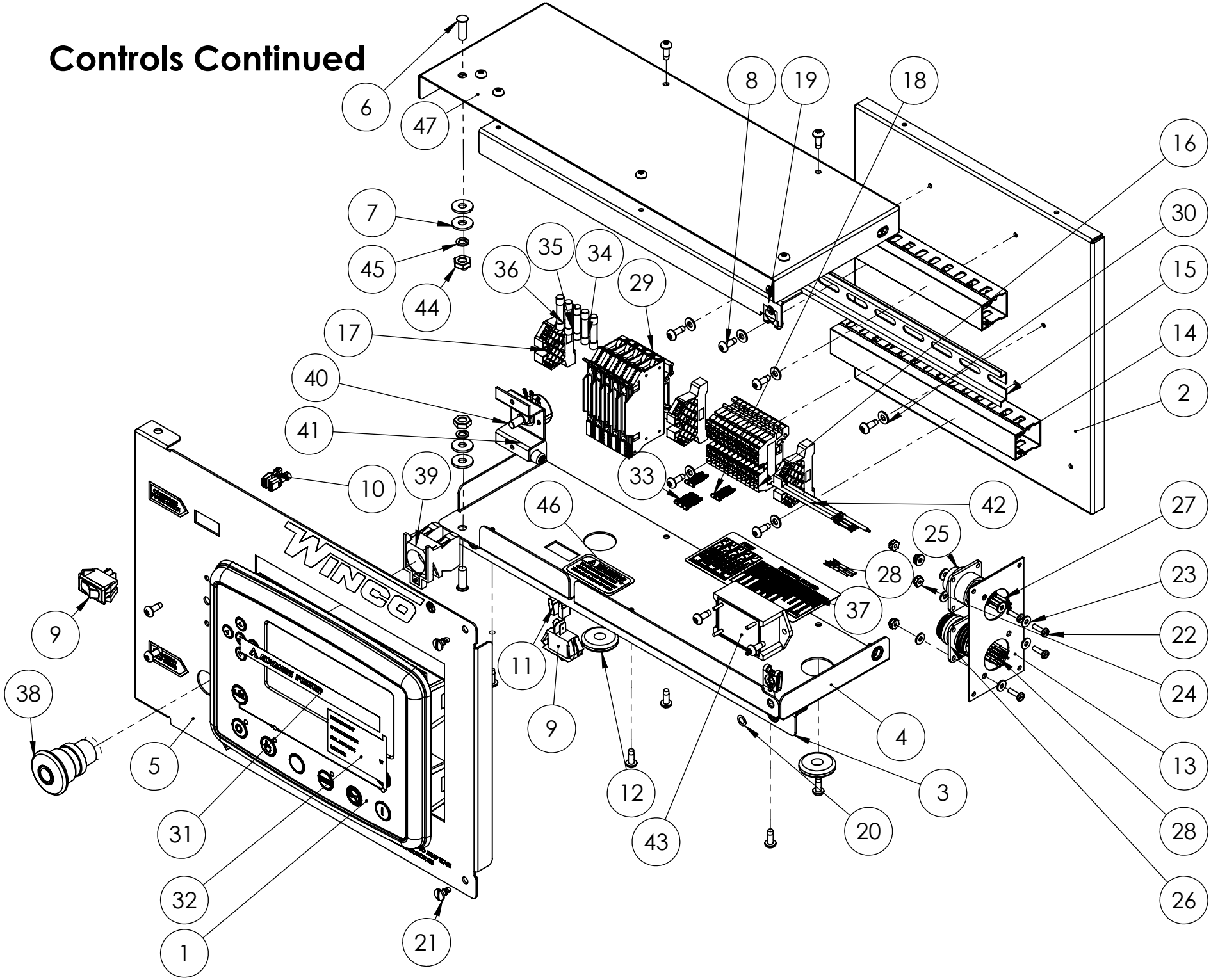

Controls Continued

ITEM NO.	PART NUMBER	DESCRIPTION	
1	351112-29	DEEP SEA ELECTRONICS 7310 MKII	1
2	351900-42	DIN RAIL MOUNTING PLATE	1
3	351900-44	COVER SUPPORT BRACKET	1
4	351900-45	DSE8610 CONTROL BOX BOTTOM	1
5	351900-47	DSE 7310 MKII FRONT PANEL	1
6	94980-003	THREAD STUD .25-20 X .750	2
7	96286-001	1/4" NYLON WASHER	4
8	21698-001	TORX PAN HEAD SCREW #10	21
9	64089-000	SPST, ROCKER SWITCH	2
10	48602-003	TERMINAL FEMALE 16-14 AWG .250 TAB	2
11	61898-000	TERMINAL FLAG 16/14AWG .250	2
12	23917-002	GROMMET, .375ID X 1	2
13	351900-51	PLUG MOUNTING PLATE	1
14	352017-001	WIRE DUCT, 8.5IN	2
15	64551-005	DIN RAIL 9.5"	1
16	80623-009	TERMINAL BLOCK, DIN MOUNTED, SPRING CAGE	12
17	80623-010	END BLOCK, DIN MOUNTED	3
18	80623-011	2-POLE TERMINAL BLOCK JUMPER	2
19	91683-000	1/4 TURN CLIP NUT	2
20	91684-000	RETAINER RING 1/4 TURN SPLIT RING	2
21	91682-001	STUD 1/4 TURN SLOTTED	2
22	24988-000	SCREW 6-32 X 1/2 BIND	4
23	425-000	#6 FLATWASHER	8
24	51802-000	NUT HEX #6-32 NYLOCK	4
25	96925-002	14 PIN CONNECTOR	1
26	96925-006	16 PIN CONNECTOR	1
27	96923-001	TERMINAL, SOCKET, 18-16AWG	10
28	96924-001	TERMINAL, PIN, 18-16AWG	16
29	2489-003	DIN RAIL FUSE HOLDER 1-1/4 X 1/4IN	5
30	598-000	#10 WASHER	6
31	16600-005	DSE MKII ADVANCE POWER LOGO INSERT	1
32	16601-007	DSE 8610 MKII LIGHT LEGEND CARD INSERT	1
33	80623-012	3-POLE TERMINAL BLOCK JUMPER	1
34	95064-008	FUSE AGC 2 AMP	3
35	95064-000	FUSE AGC 3 AMP	1
36	95064-006	FUSE AGC 10 AMP	1
37	351095-16	DECAL, FUSES AND TERMINAL BLOCKS	1
38	99783-001	SWITCH, PUSH-PULL	1
39	99783-002	SWITCH CONTACT	1
40	97517-001	RHEOSTAT	1
41	351900-36	RHEOSTAT MOUNTING BRACKET	1
42	96923-101	PLUG TERMINAL	4
43	96333-001	LOW COOLANT MODULE	1
44	638-000	HEX NUT, .25IN	2
45	479-000	LOCK WASHER, .25" SPLIT	2
46	63941-004	DECAL FUSE WARNING (ENGLISH)	1
47	351900-52	DSE CONTROL BOX TOP	1
48	351900-53	DSE PANEL STOP	1
49	11067-000	18 GA WIRE	1

Terminal Box Assembly

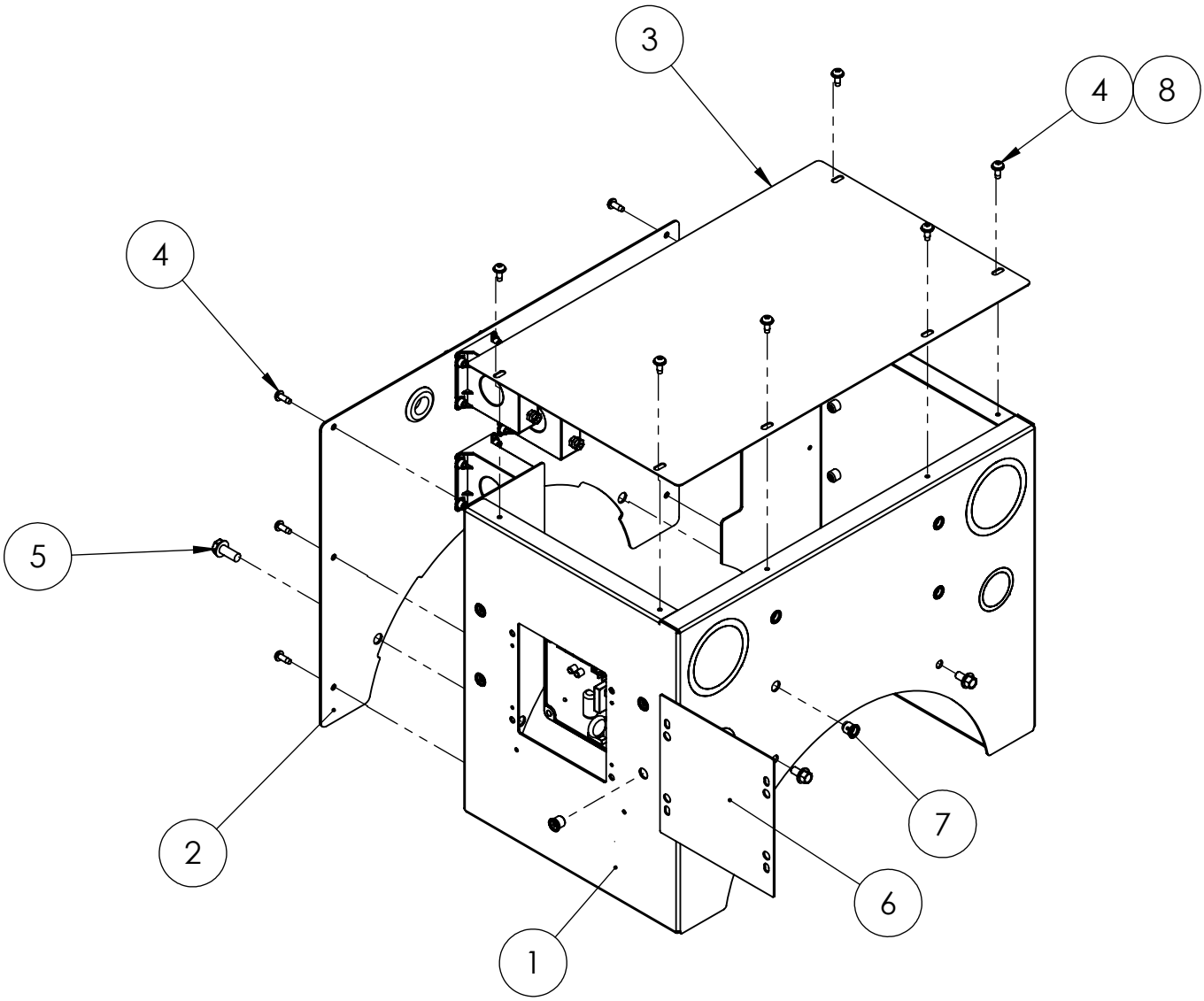

ITEM NO.	PART NUMBER	DESCRIPTION	QTY.
1	2000-0174	DE30 TERMINAL BOX	1
2	801025-009	TERMINAL BOX CT PANEL ASSEMBLY	1
3	2000-0173	DE30 TERMINAL BOX COVER	1
4	21698-001	TORX PAN HEAD SCREW #10	12
5	62173-001	SELF TAP.SC. 5/16-18X.75	2
6	1000-0304	DE40 AVR COVER	1
7	352125-1	1/4-20 RIVET NUT 22 GA-10GA	12
8	598-000	#10 WASHER	6
9	93542-018	LEAD WIRE ASSY	1
10	1000-1712	BRKT, GEN BOX	2
11	16248-000	.25-20 FLANGE NUT	2
12	352120-1	1/4-20 X .500 FHCS	2

Terminal Box CT Panel Assembly

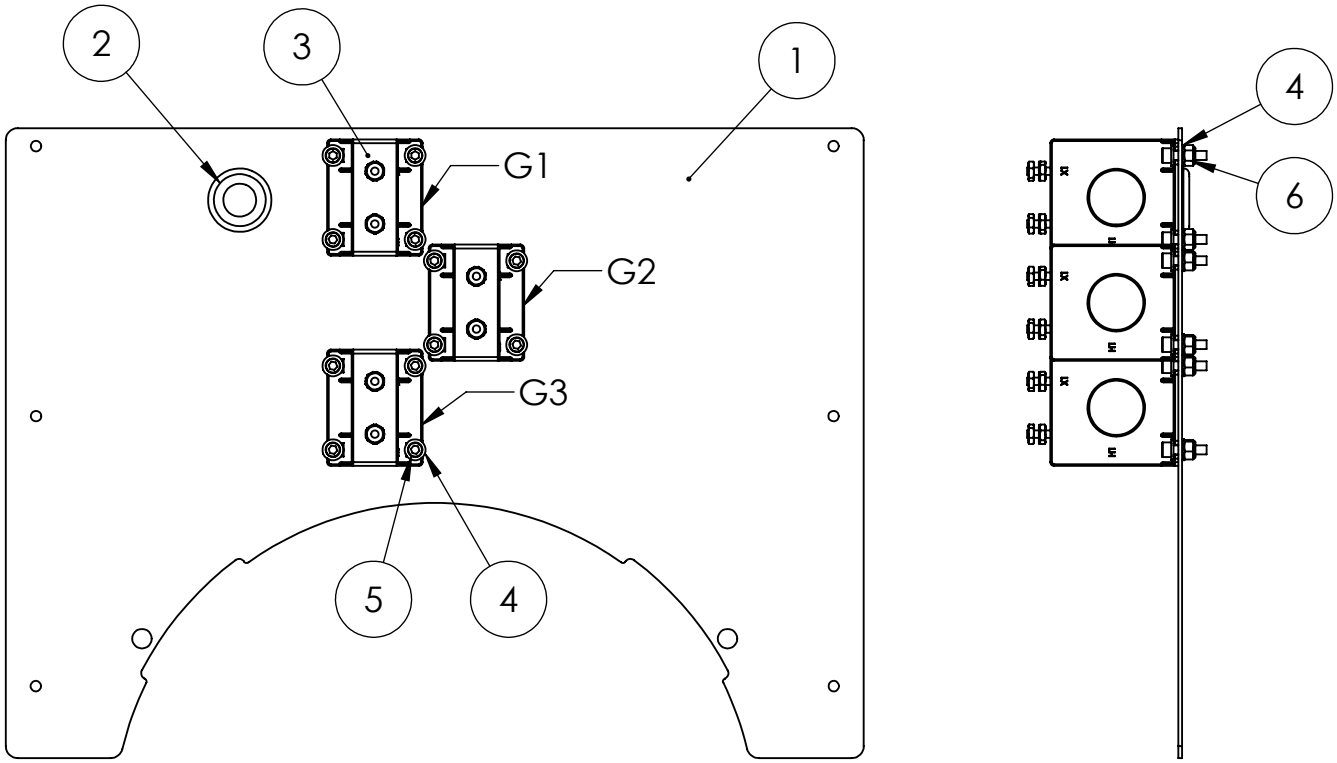

ITEM NO.	PART NUMBER	DESCRIPTION	QTY.
1	801025-009	TERMINAL BOX CT PANEL	1
2	23917-000	GROMMET .6875ID X 1	1
3	80126-003	CT 150:5 PANEL MOUNT	3
4	598-000	#10 WASHER	24
5	64872-000	SOC.HCS 10-24 X 3/4 BLK	12
6	5315-000	NUT HEX 10-24 NYLON	12
7	99347-029	AC HARNESS FOR DE SERES GENERATORS	1

Generator

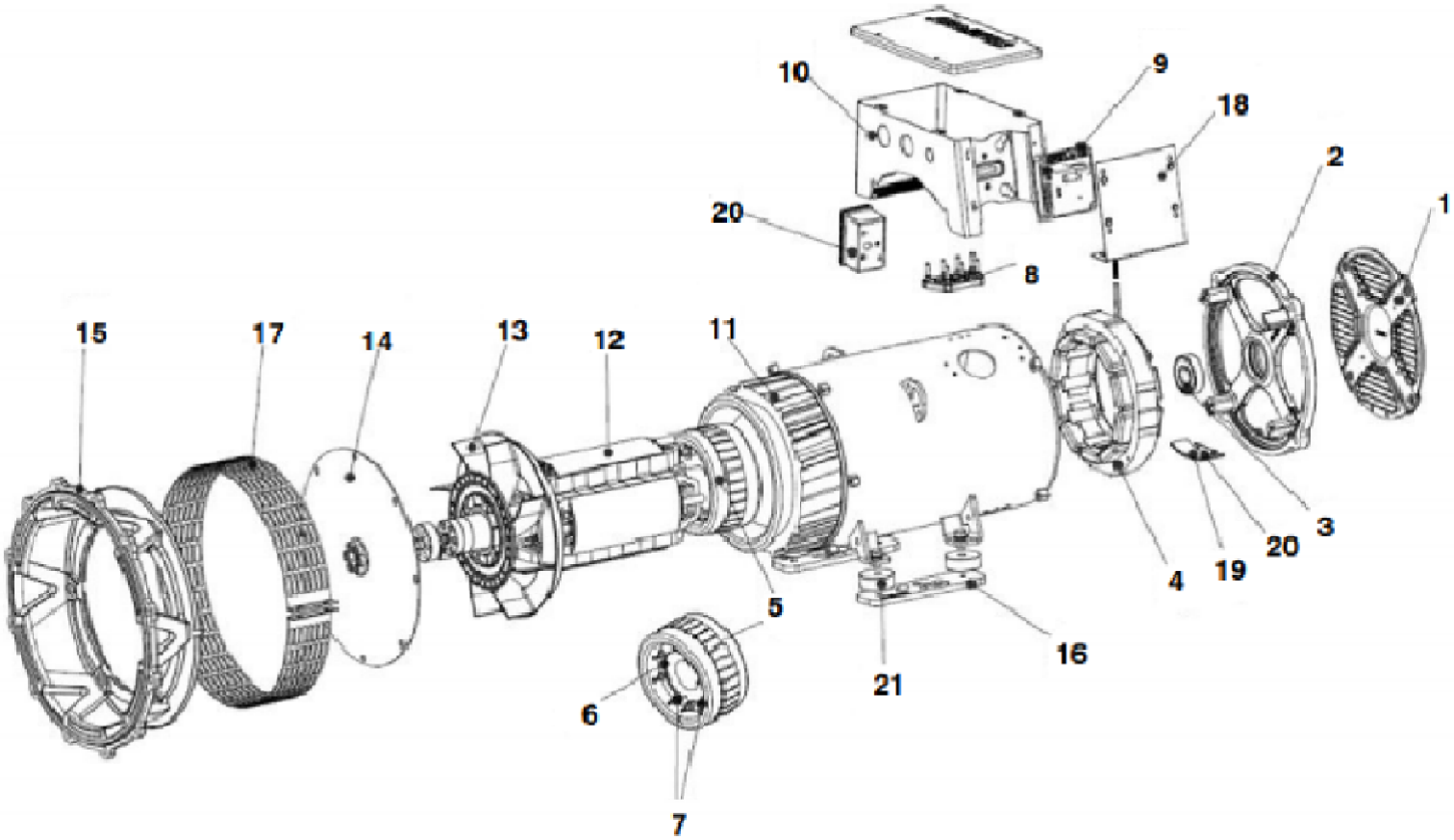

ITEM	DESCRIPTION	DE40	QTY
--	COMPLETE GENERATOR END	350023-27	1
--	STAMFORD MODEL	S1L2-K1	--
--	WINDING	711	--
9	AVR AS540	8-101	1
--	RECTIFIER SERVICE KIT	8-818	1
Contact Winco for additional generator parts support.			

EXPECTED RESISTANCE (Ω)@ 20°C (+/-10%)	
MODEL	S1L2-K1
STATOR WINDING (LEAD TO NEUTRAL)	0.1774
ROTOR WINDING	0.965
EXCITER STATOR	15.50
EXCITER ROTOR (LEAD TO LEAD)	0.2244
AUX WINDING	3.91

Generator Connections

THREE PHASE AC WIRE HIGH AND LOW WYE

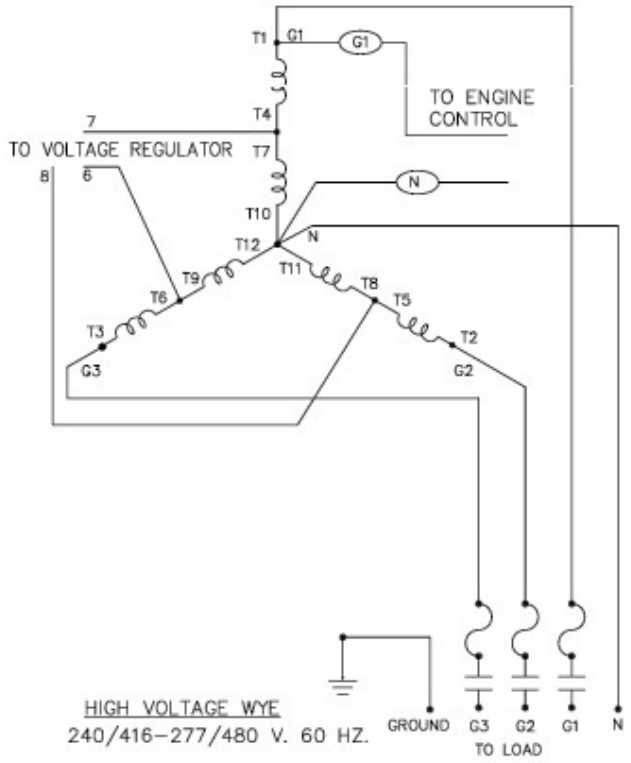

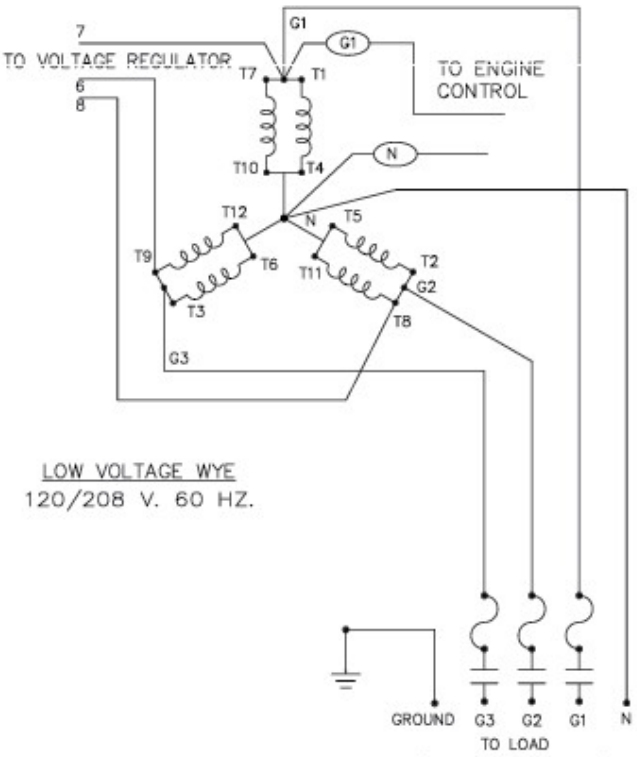

THREE PHASE AC WIRING- DELTA

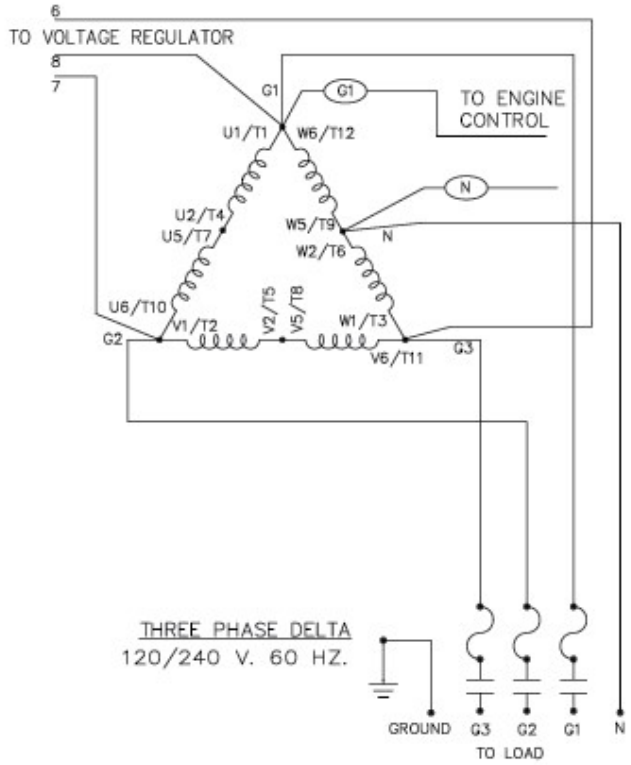

SINGLE PHASE 311 WINDING

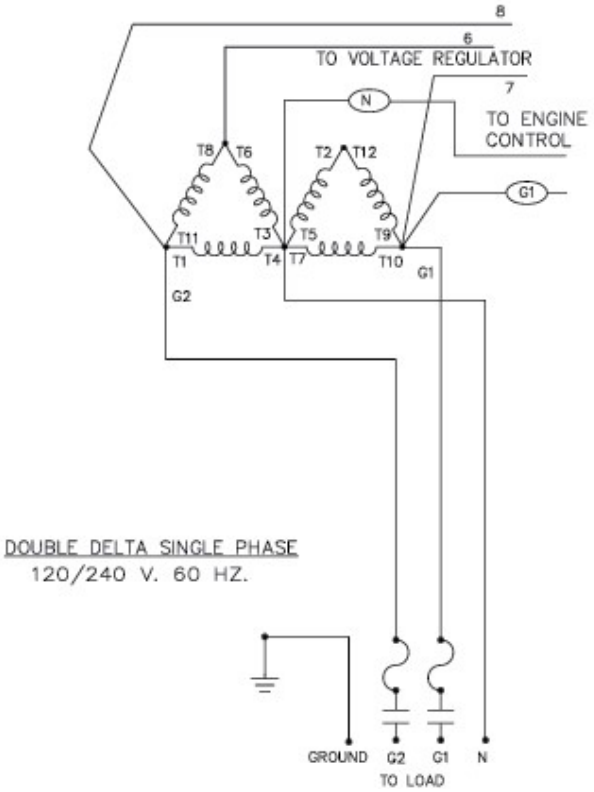

Manual Generator Control Schematic

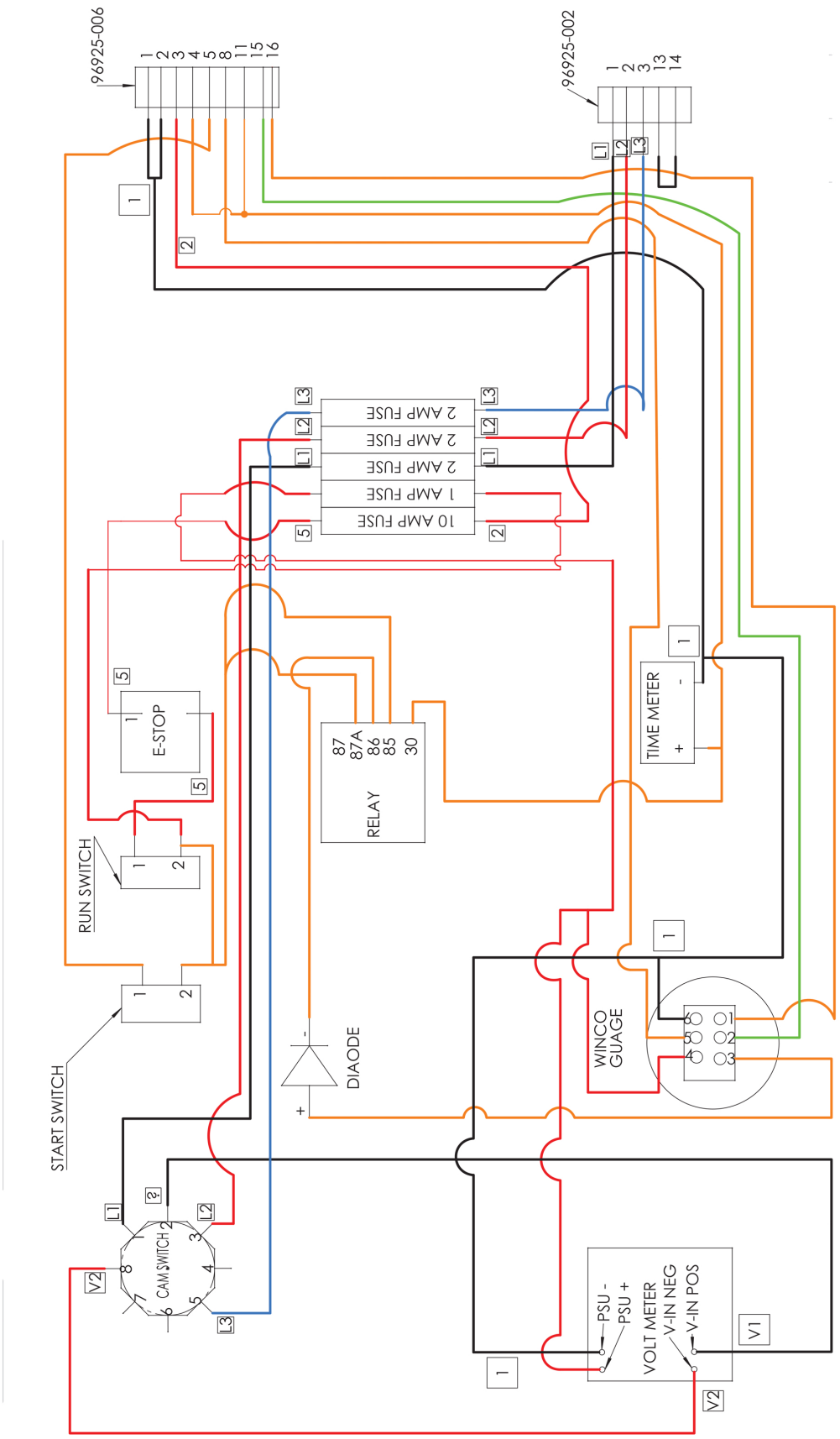

DSE7310 Generator Control Schematic

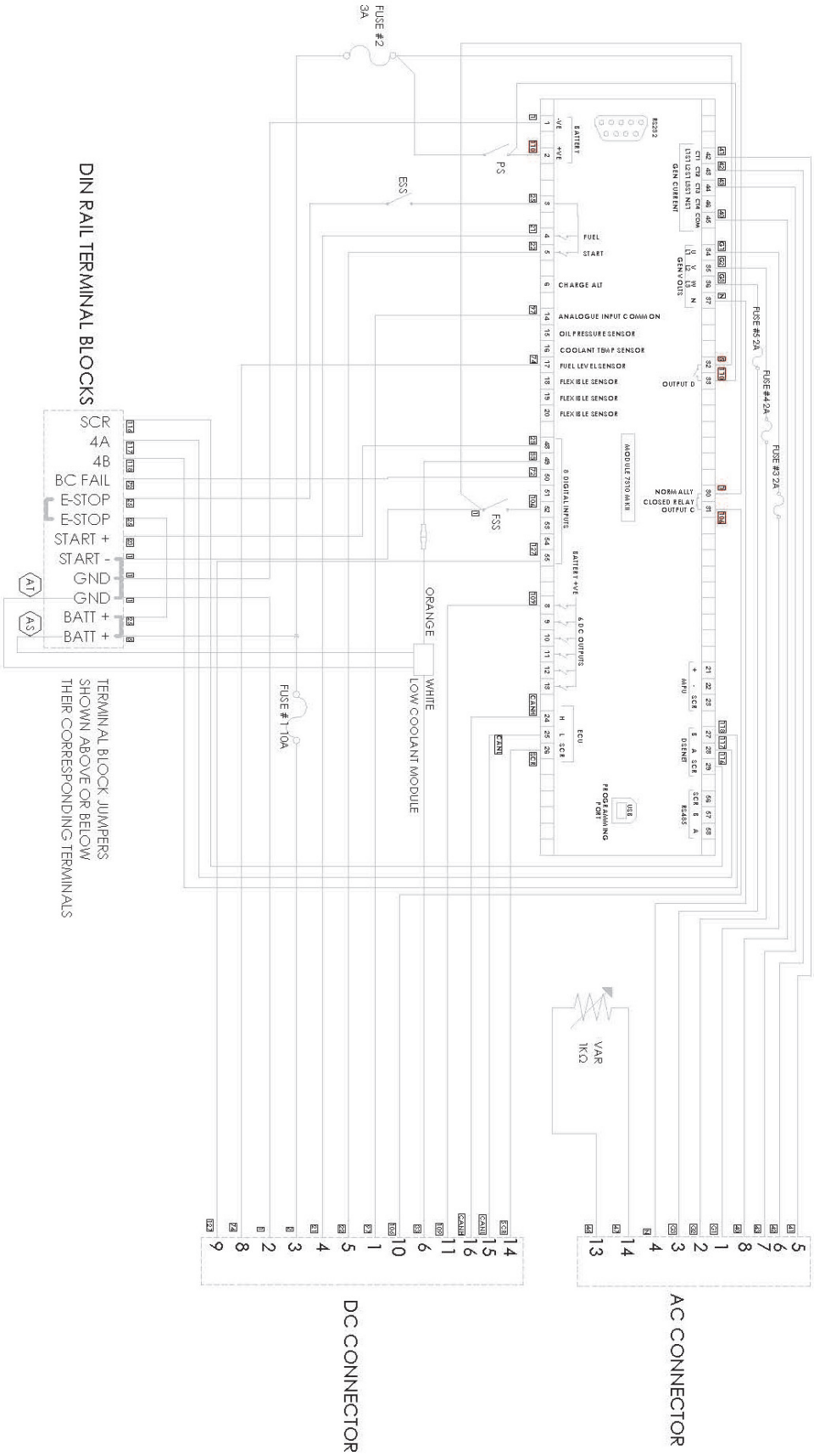
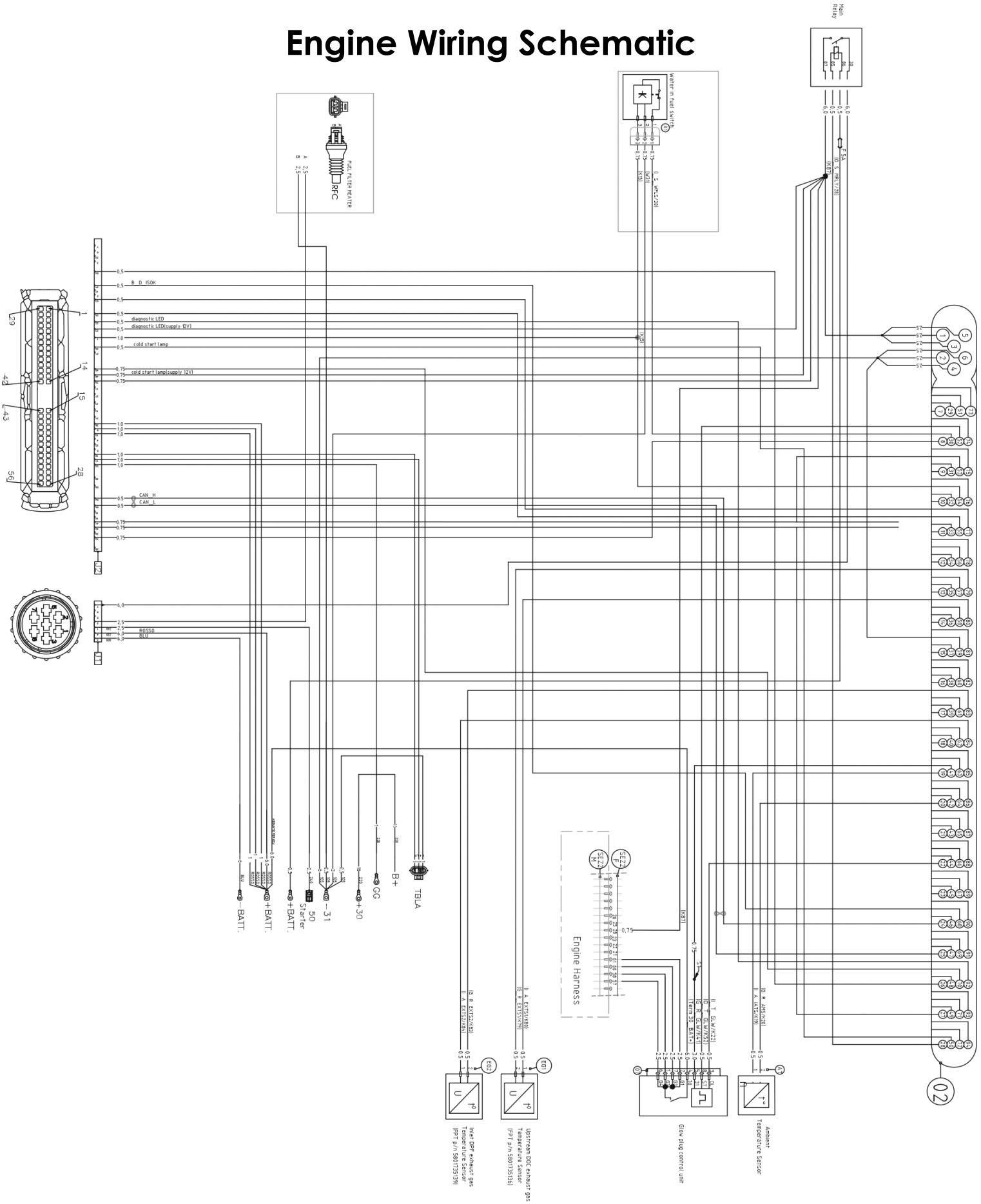
Engine Wiring Schematic